Assembly instructions

Copyright Dieselpunk.ro 2022

Difficulty level:	intermediate
Completion Time	14-18 hours

Copyright Dieselpunk.ro 2022

NECESSARY TOOLS AND MATERIALS

Copyright Dieselpunk.ro 2022

B&W Printer

Scissors or a cutter

Hole Puncher **(We recommend 1.5 mm sized holes for this build)**

About 3 square feet of 6-7 oz veg tan leather and 2.5 square feet of 4 oz veg tan or chrome tan leather

Thread and needles **(We recommend 1 mm waxed thread for this build)**

- **1 x 25 mm buckle**
- **1 x 5 mm Sam Browne Button**
- **2 x 20 mm swivel hooks**
- **2 x 20 mm D-Rings**

Copyright Dieselpunk.ro 2022

You can get the same hardware we used to finish this bag here:

HTTPS://WWW.ETSY.COM/SHOP/THELEATHERREPUBLIC

Before you start working **please watch this** short **video** to see how to print and use your pattern correctly:

https://youtu.be/-LfRFG5PtW0

Copyright Dieselpunk.ro 2022

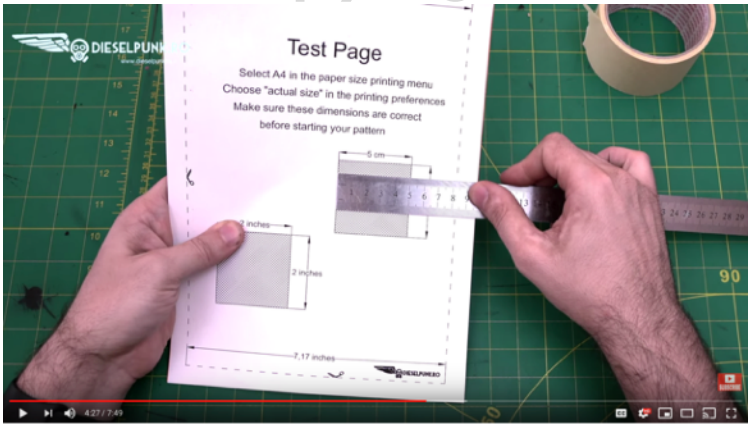

You will learn how to print at correct scale,

... how to assemble the large pieces of the pattern correctly ...

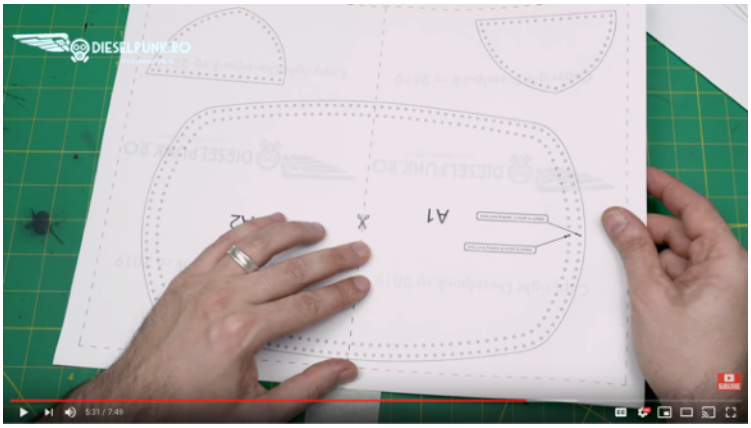

... and how to use the paper pattern to cut all the leather pieces you need for your design

Copyright Dieselpunk.ro 2022

PRINTING THE PATTERN

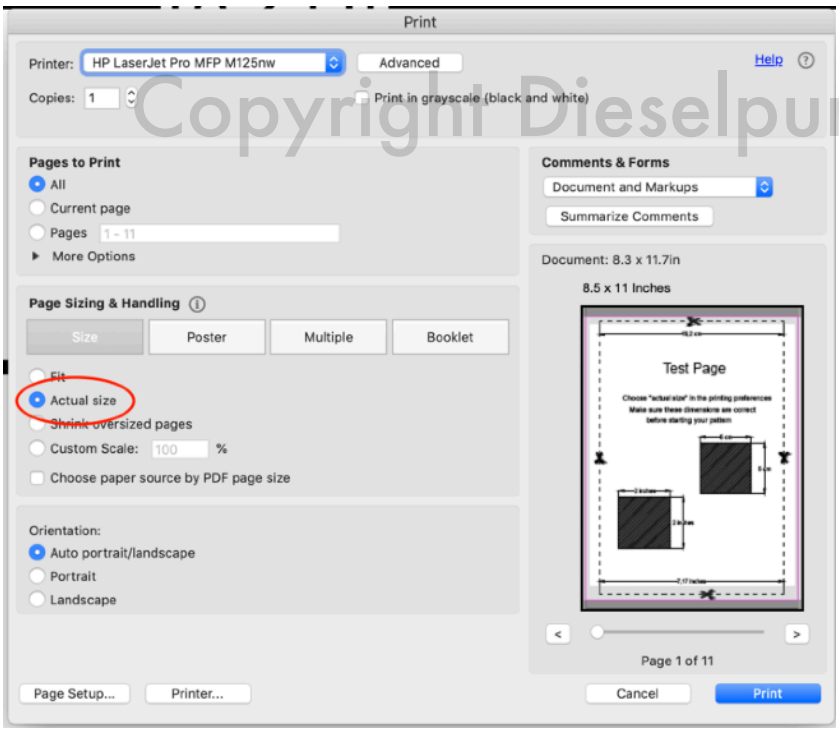

Copyright Dieselpunk.ro 2022

Set up your paper size to A4, Letter or Legal and **choose actual size** in the printer settings

Please access your instructional video here:

HTTPS://YOUTU.BE/FVQEUTFV6MY

Copyright Dieselpunk.ro 2022

Copyright Dieselpunk.ro 2022

Would love to see what you did, so please share or leave a review on

Stuck and need help? go ahead and send us a message
We are always happy to help

Thank you for constructing your bag with our patterns

To further help all our clients we created this FaceBook group for everyone to share ideas and stay up to date with the latest patterns available. (mention the order number to be approved immediately)

Please follow the link below to join.
https://www.facebook.com/groups/1434028716724087/

Copyright Dieselpunk.ro 2022

Best Regards
Tony

18,2 cm

Test Page

Copyright Dieselpunk.ro 2022

Select A4, letter or legal in the paper size printing menu

Choose "actual size" in the printing preferences

Make sure these dimensions are correct

before starting your pattern

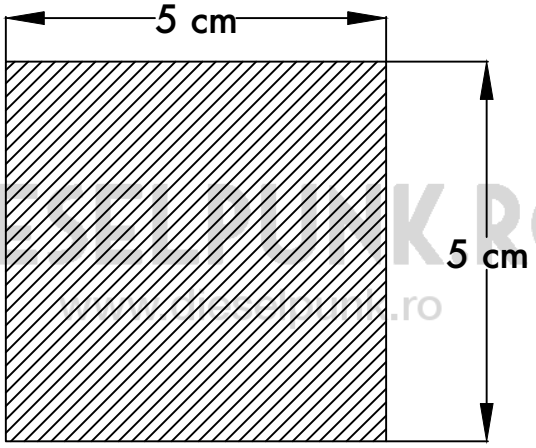

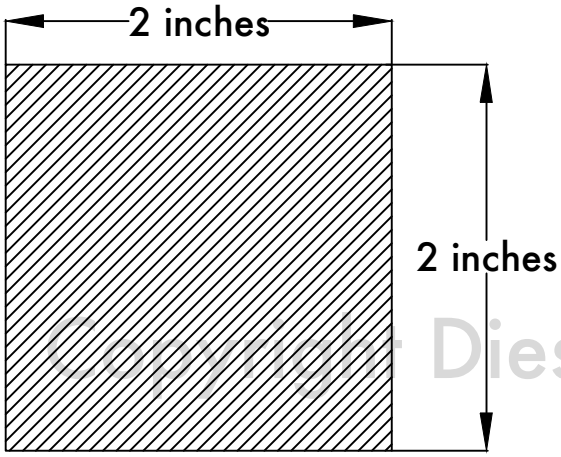

Copyright Dieselpunk.ro 2022

7,17 inches

DIESELPUNK.RO

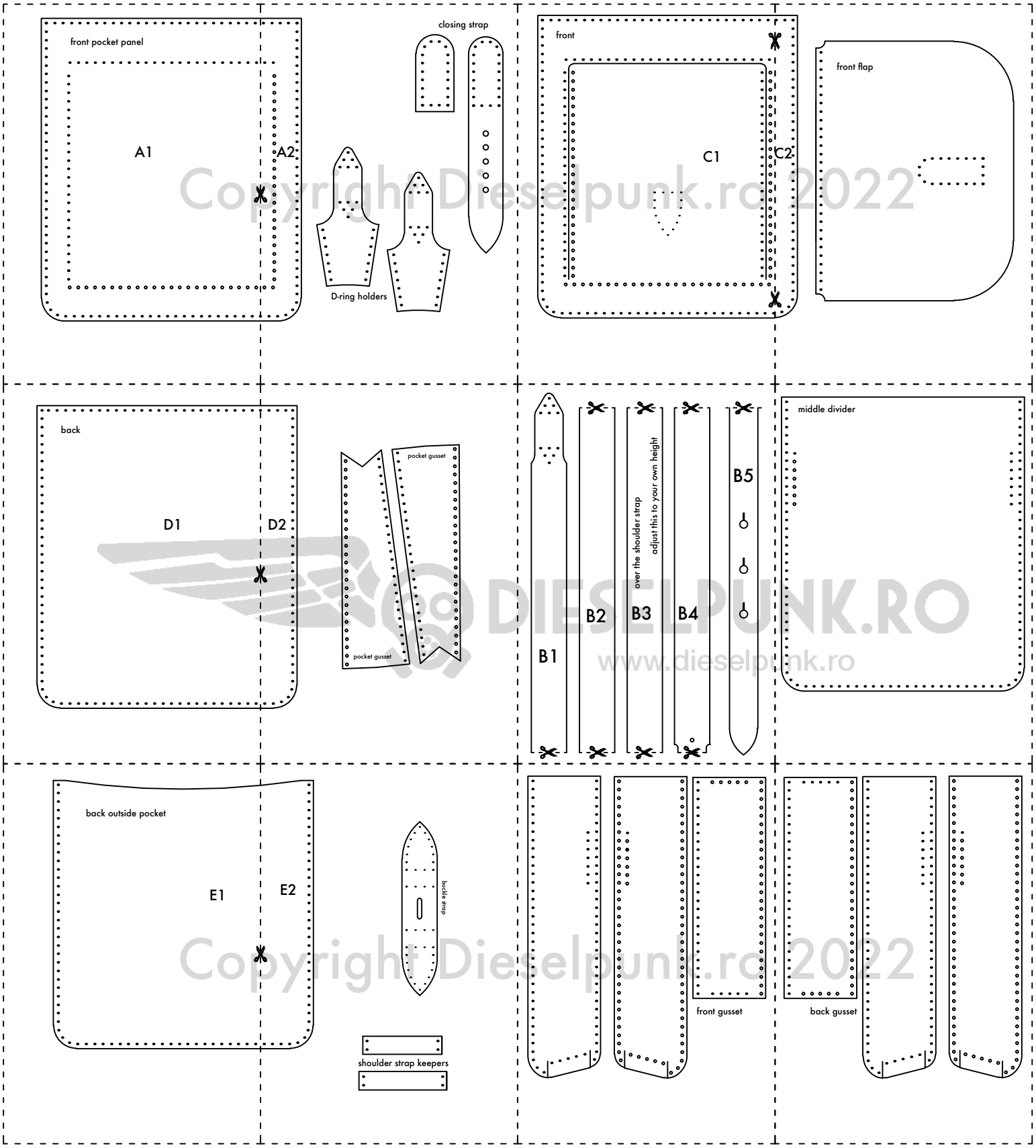

Copyright Dieselpunk.ro 2022
DIESELPUNK.RO
www.dieselpunk.ro
Copyright Dieselpunk.ro 2022

front pocket panel

A1

Copyright Dieselpunk.ro 2022

DIESELPUNK.RO
www.dieselpunk.ro

Copyright Dieselpunk.ro 2022

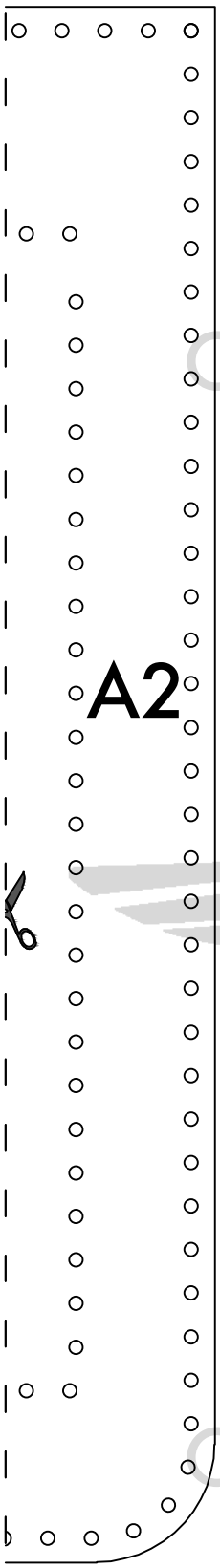

closing strap

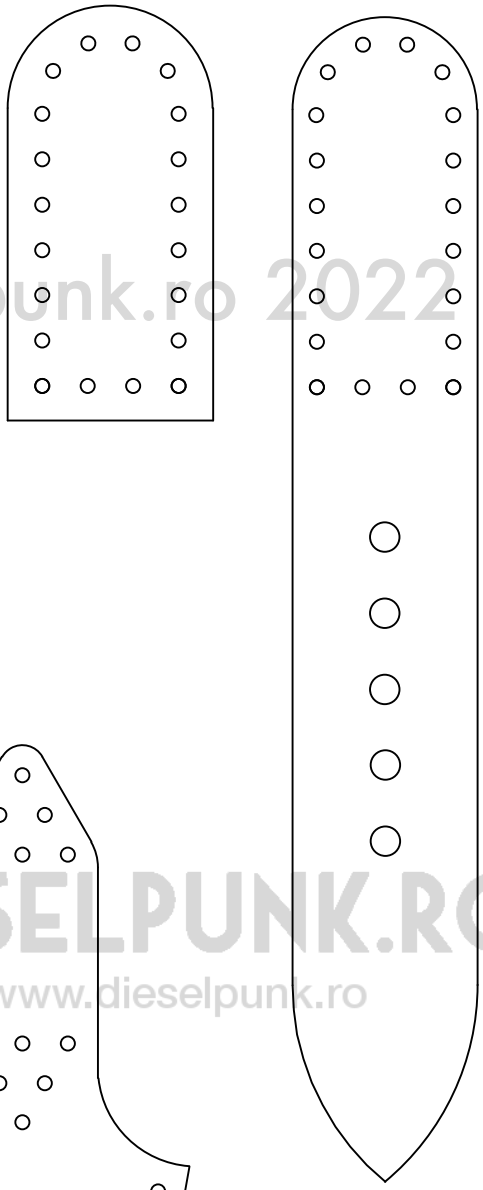

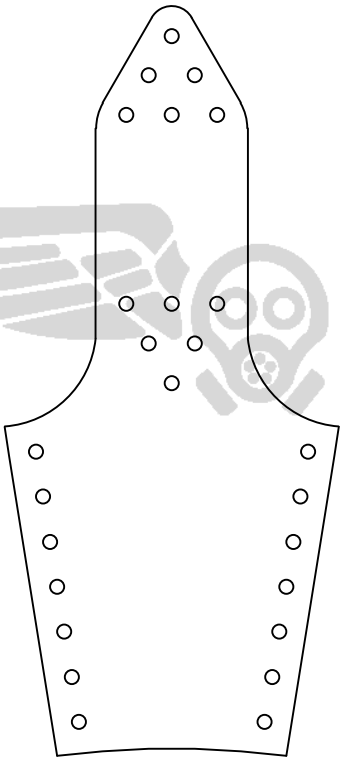

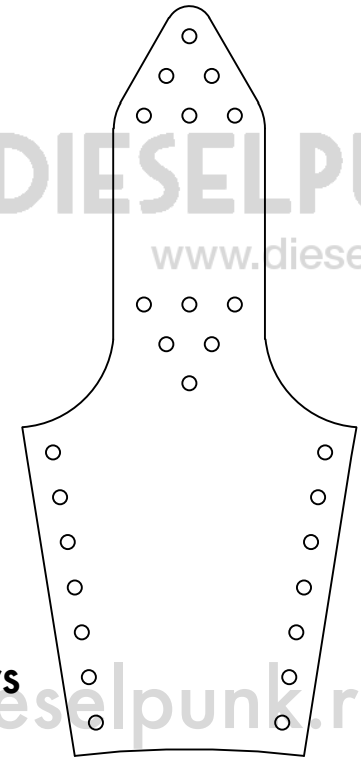

D-ring holders

Copyright Dieselpunk.ro 2022
DIESELPUNK.RO
www.dieselpunk.ro
Copyright Dieselpunk.ro 2022

front

C1

Copyright Dieselpunk.ro 2022
DIESELPUNK.RO
www.dieselpunk.ro
Copyright Dieselpunk.ro 2022

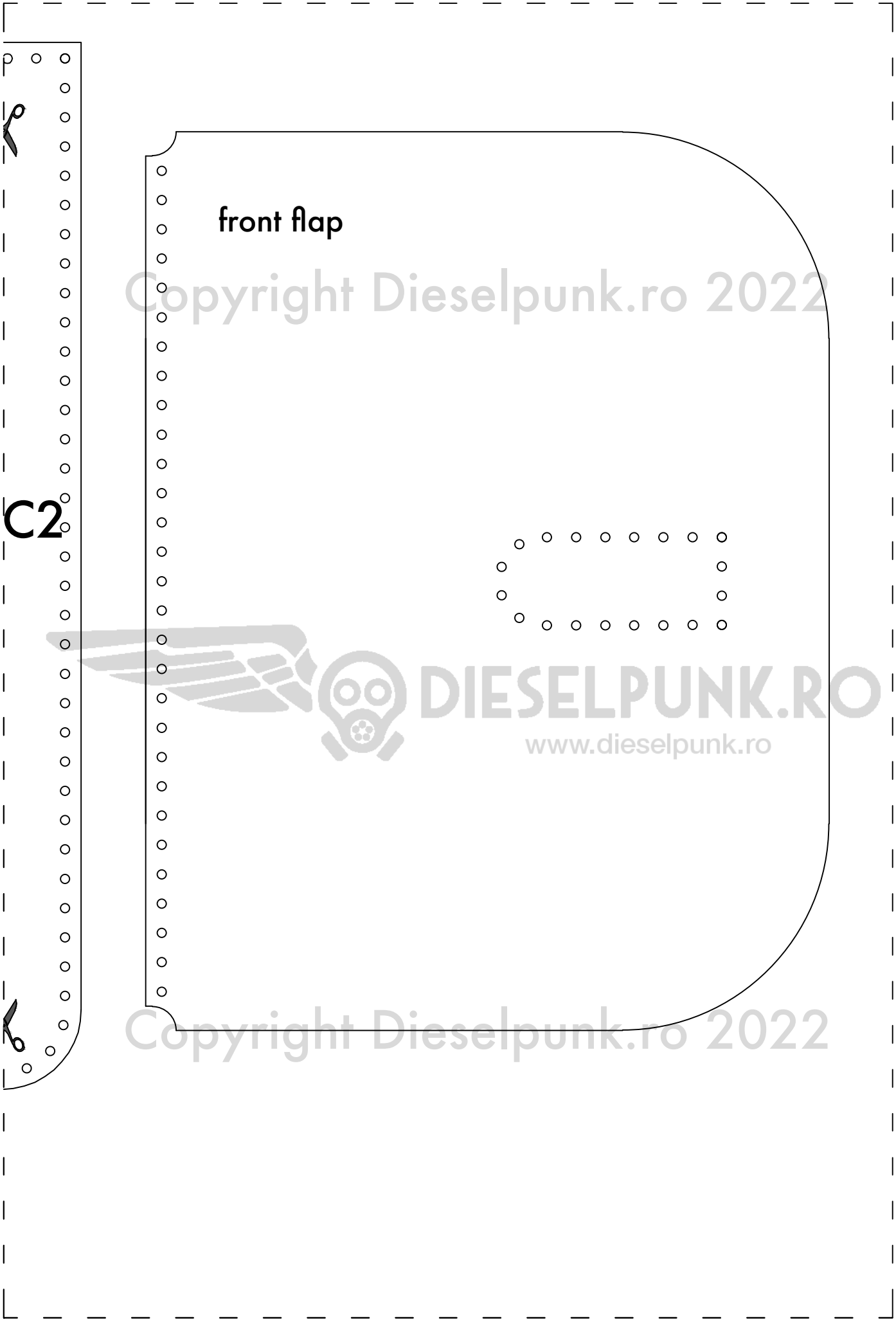

Copyright Dieselpunk.ro 2022
DIESELPUNK.RO
www.dieselpunk.ro
Copyright Dieselpunk.ro 2022

back

Copyright Dieselpunk.ro 2022

D1

DIESELPUNK.RO
www.dieselpunk.ro

Copyright Dieselpunk.ro 2022

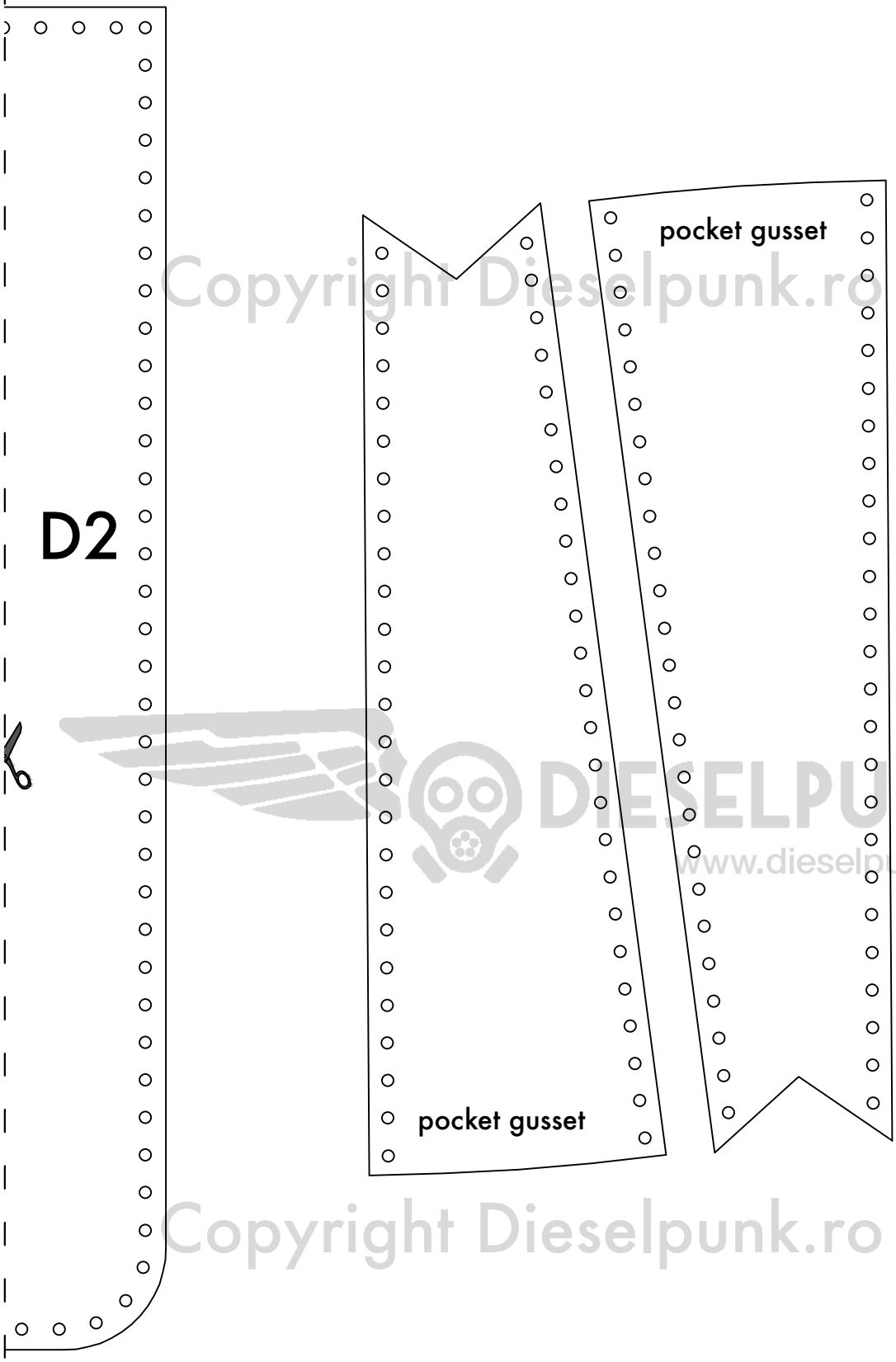

Copyright Dieselpunk.ro 2022
DIESELPUNK.RO
www.dieselpunk.ro
Copyright Dieselpunk.ro 2022

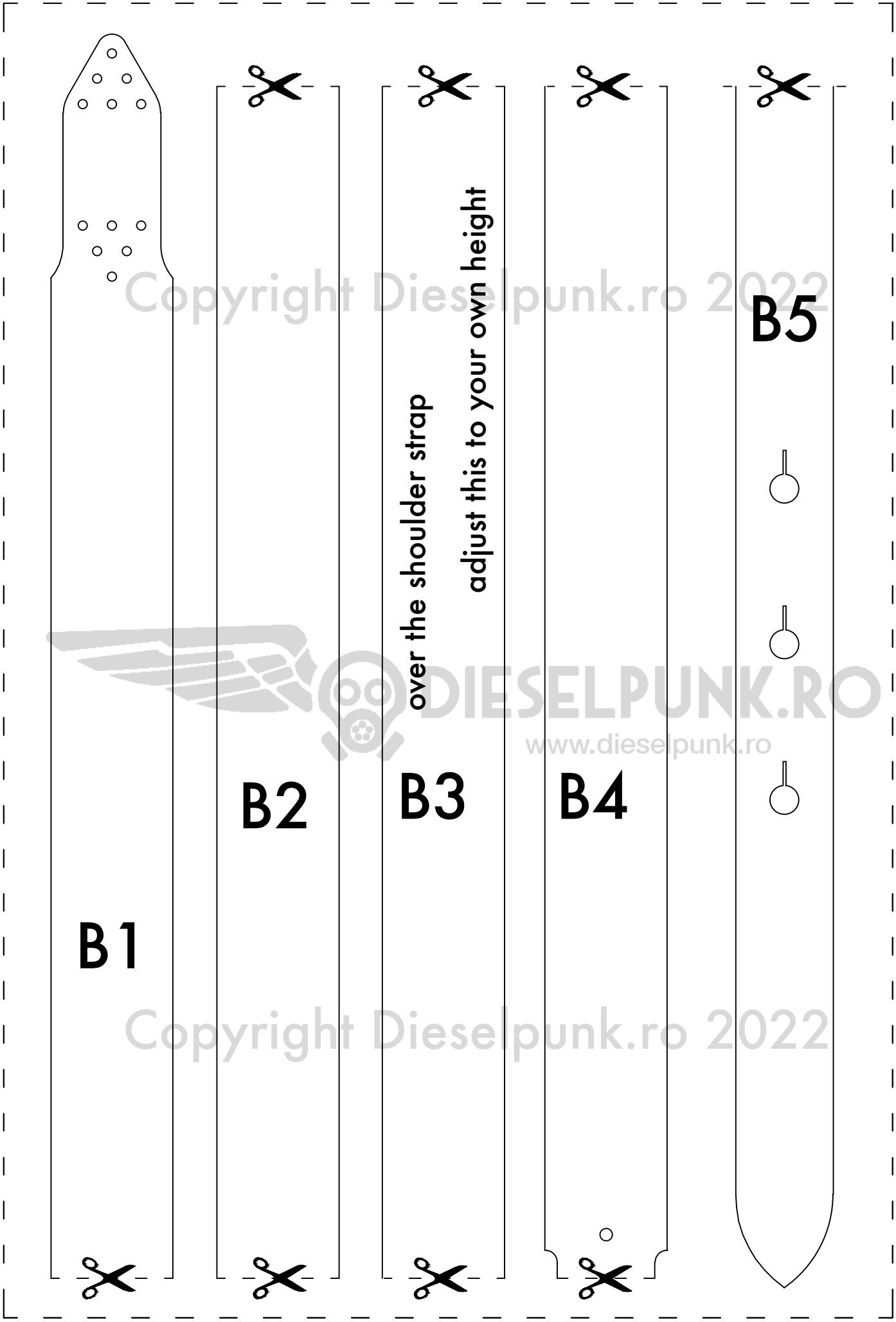

Copyright Dieselpunk.ro 2022
DIESELPUNK.RO
www.dieselpunk.ro
Copyright Dieselpunk.ro 2022

middle divider

Copyright Dieselpunk.ro 2022

DIESELPUNK.RO
www.dieselpunk.ro

Copyright Dieselpunk.ro 2022

back outside pocket

Copyright Dieselpunk.ro 2022

E1

DIESELPUNK.RO
www.dieselpunk.ro

Copyright Dieselpunk.ro 2022

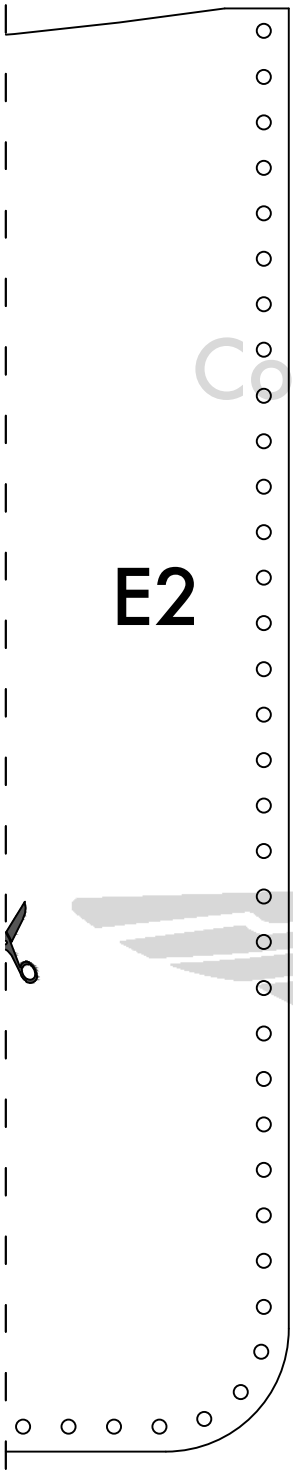

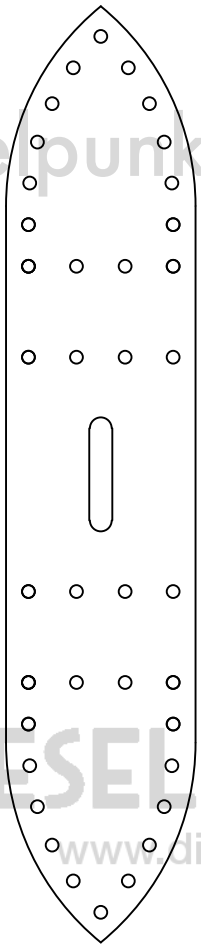

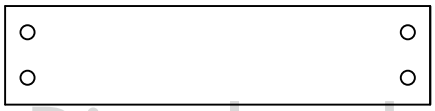

shoulder strap keepers

Copyright Dieselpunk.ro 2022
DIESELPUNK.RO
www.dieselpunk.ro
Copyright Dieselpunk.ro 2022

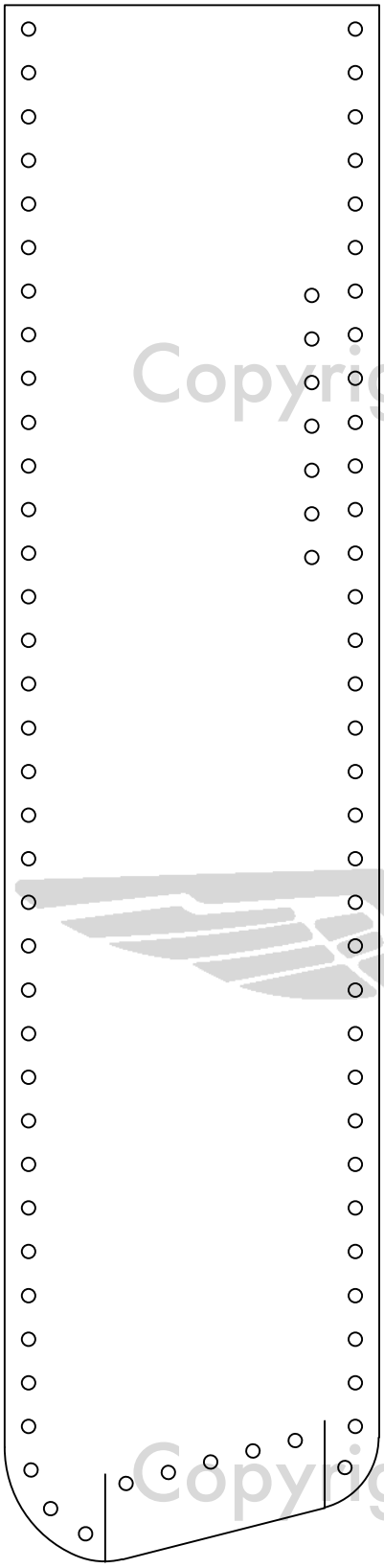

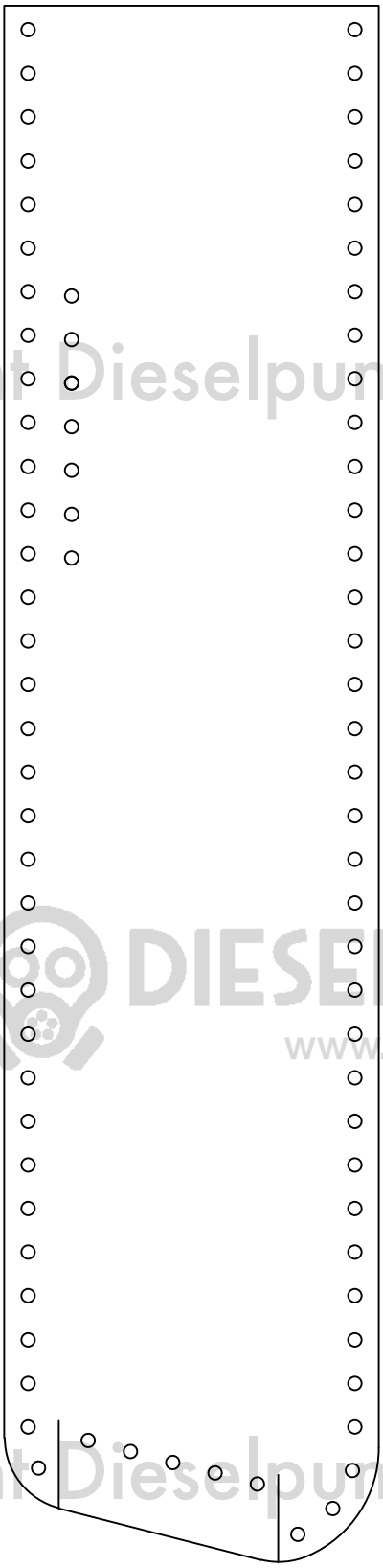

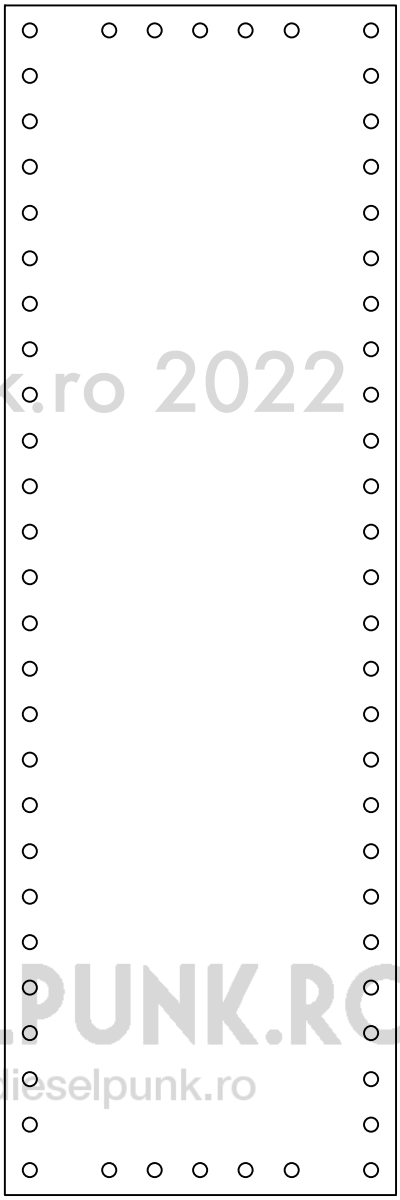

front gusset

Copyright Dieselpunk.ro 2022
DIESELPUNK.RO
www.dieselpunk.ro
Copyright Dieselpunk.ro 2022

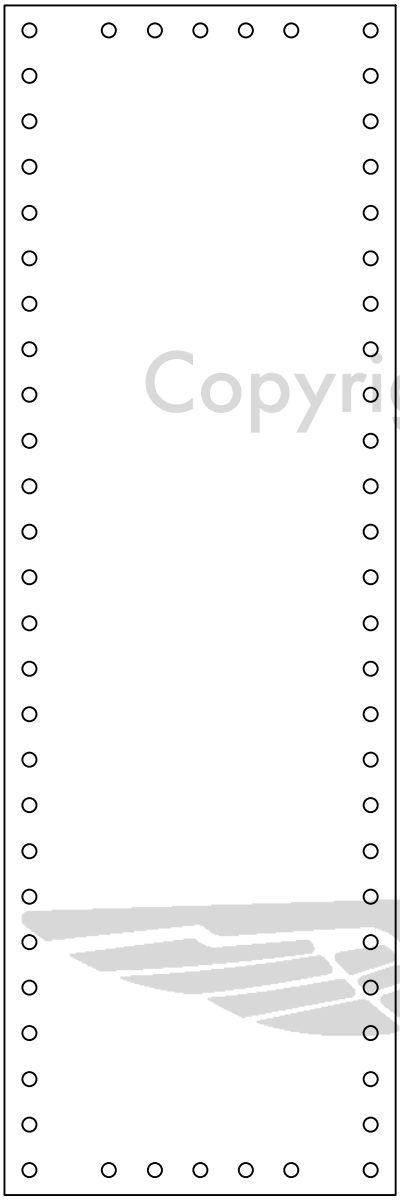

back gusset

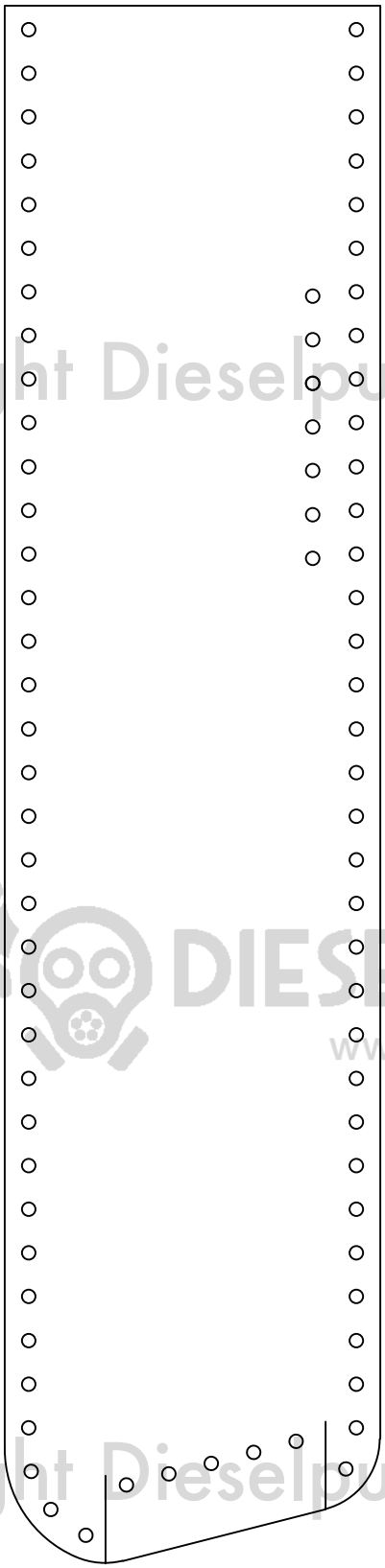

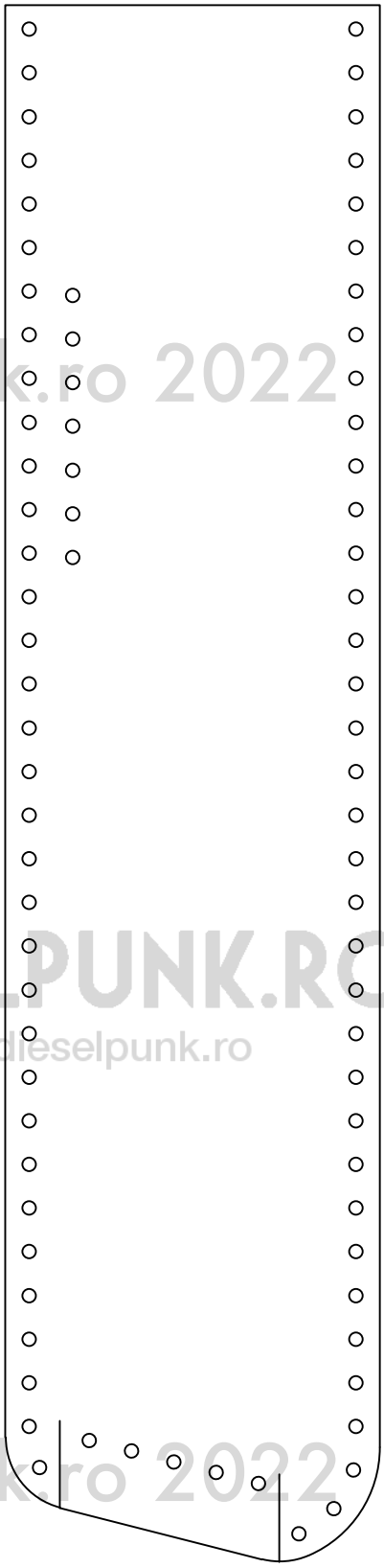

Copyright Dieselpunk.ro 2022
DIESELPUNK.RO
www.dieselpunk.ro
Copyright Dieselpunk.ro 2022

Copyright Advisory

Copyright Dieselpunk.ro 2022

This design is the property of Dieselpunk SRL and can be used under the terms stated below:

YOU CAN SELL any items made with this pattern on your own web site or in a brick and mortar shop, at conventions, fairs and so forth as long as you don't sell more than 10 of each design each year.

If you want to sell them on Etsy.com I will require you buy my pattern again each time you make a sale to cover my designer rights*

*Note that I do not police this rules and I only rely on the honor system to get the due credit.

However if I feel these rules are abused I may choose to take further action within the copyright and the DMCA international law

THESE PATTERNS ARE NOT TO BE RESOLD OR SHARED FOR FREE
UNDER ANY CIRCUMSTANCES.

© 2022 Dieselpunk.ro All Rights Reserved

Copyright Dieselpunk.ro 2022

DIESELPUNK.RO
www.dieselpunk.ro

DIESELPUNK.RO