18,2 cm

Test Page

Make sure these dimensions are correct
before starting your pattern

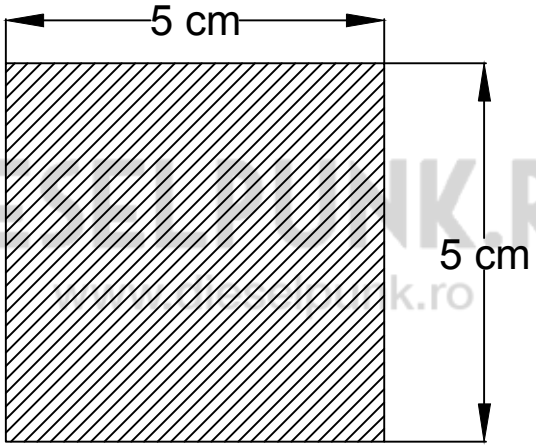

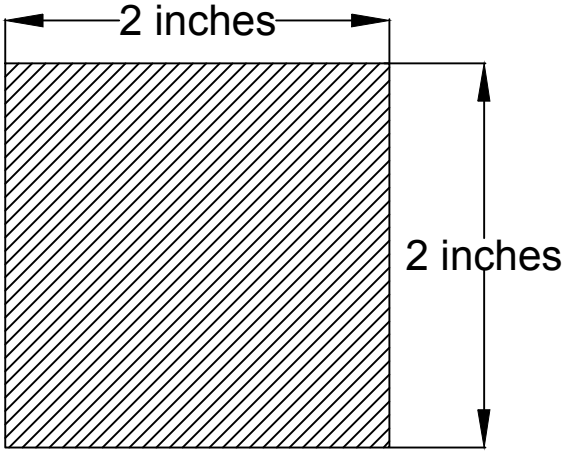

DIESELPUNK.RO
www.dieselpunk.ro

7,17 inches

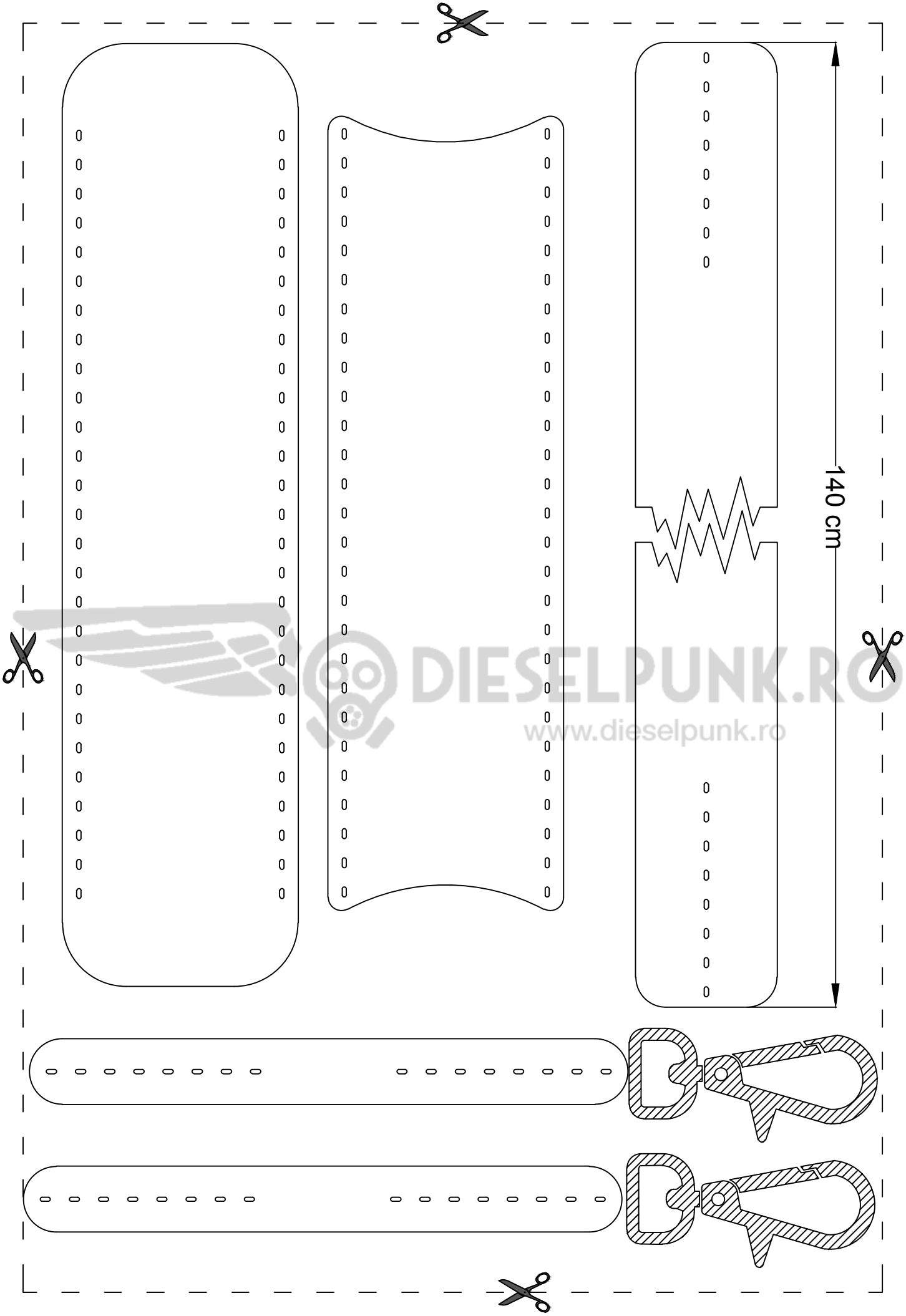

DIESELPUNK.RO
www.dieselpunk.ro

Assembly instructions

Difficulty level: easy
Completion Time 30-60 min

NECESSARY TOOLS

B&W Printer

Scissors or a cutter

Hole Puncher

Leather strap and a few scraps

Thread and needles

PRINTING THE PATTERN

Set up your printer to A4 paper with no margins on landscape mode.

Alternatively you can use “letter” format which is approximately the same size and will not impact the size of the product

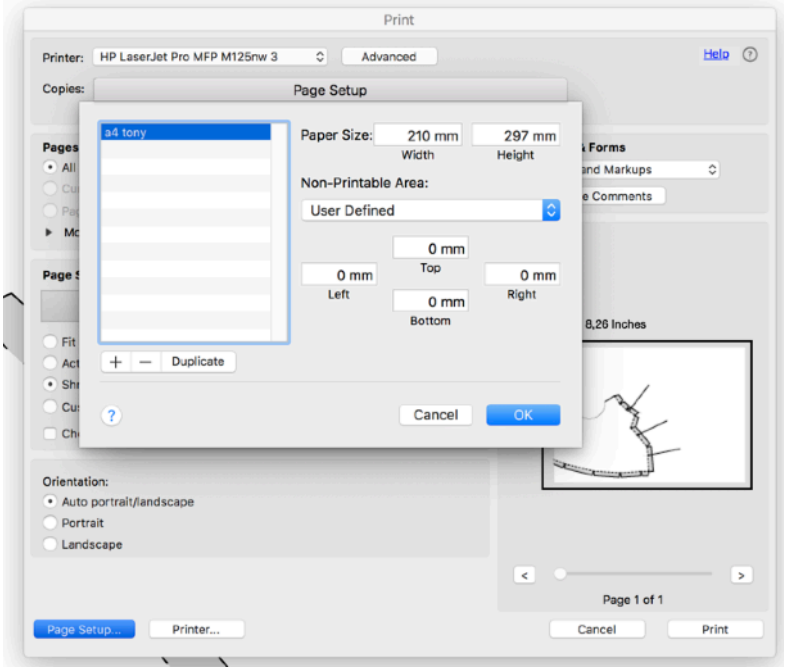

Printing

The **Test Page** is a measuring reference and you can use a ruler to make sure it matches the square. That means the rest of the pattern will print on the right size

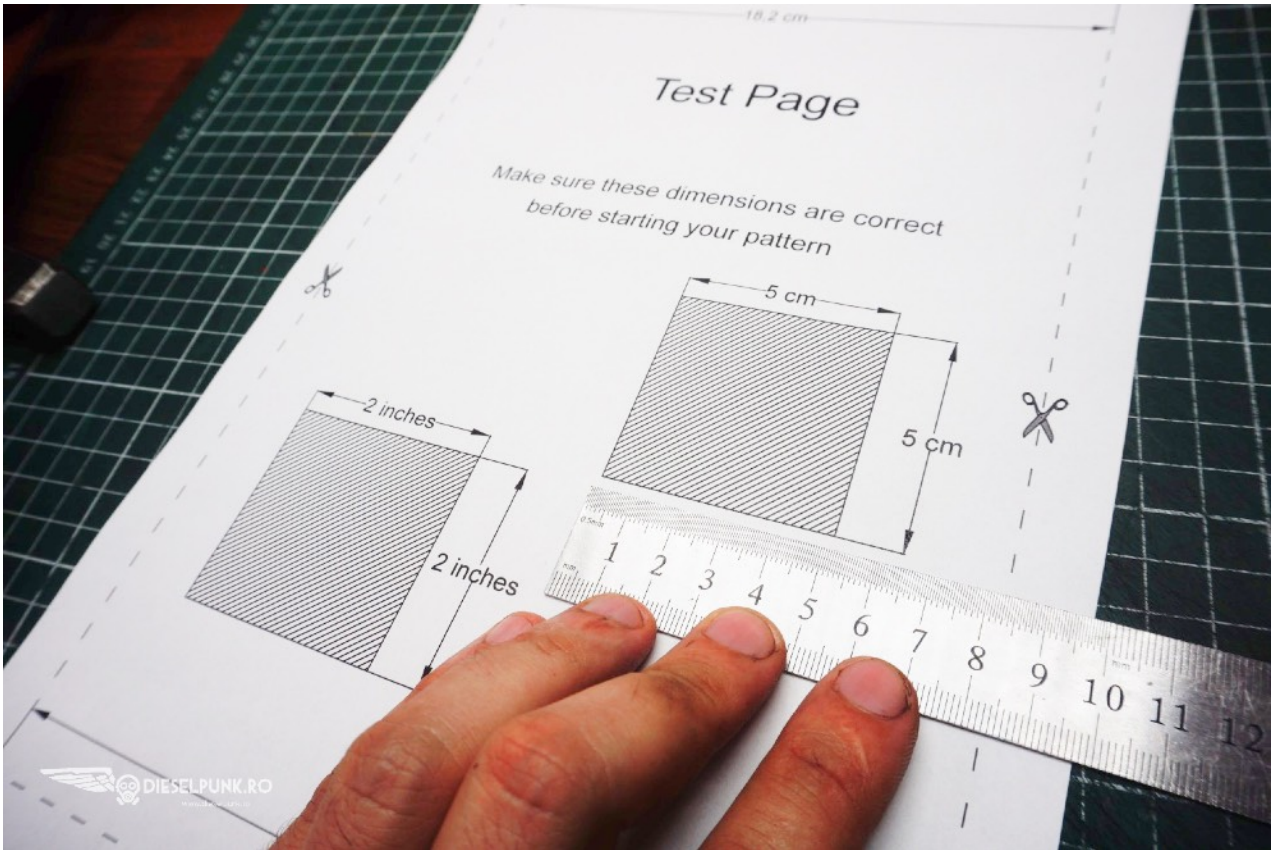

Print the paper patterns and use them to cut the leather parts. Note that the long shoulder strap needs to be cut at the length that fits you best, so measure first to make sure you don't cut it too short. After you are done you should get everything shown below

Start by stitching these parts first as shown in the following pictures

Time to attach the metal fittings. Make sure you cut the small holding straps wide enough to fit through the loop with ease

Your strap is done and can be attached to your bag