J.C.D

Top strap

leather thickness: 3-3,2

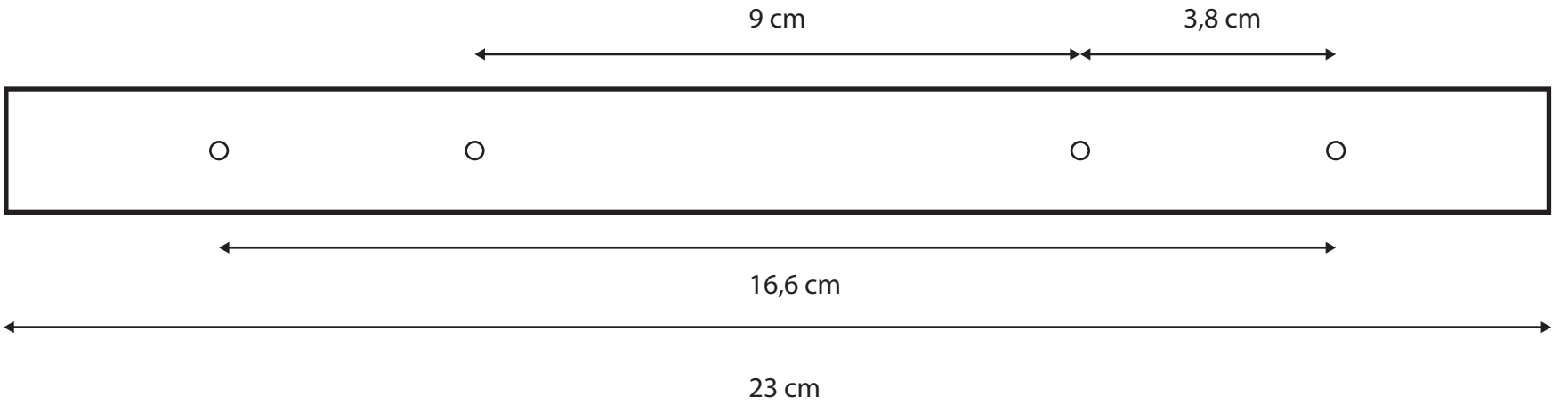

Strap and belt keeper

leather thickness: 3-3,2

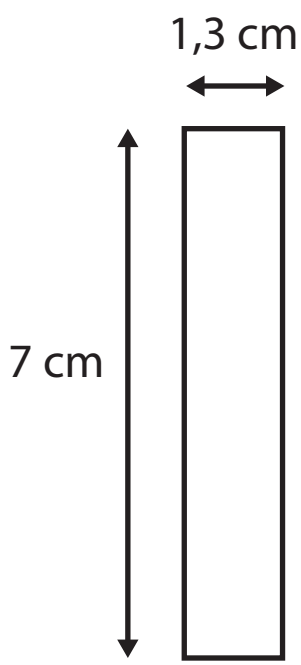

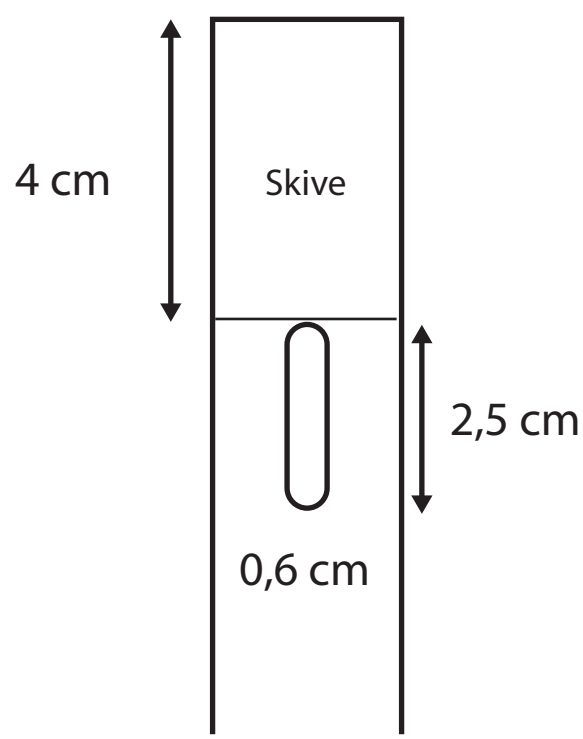

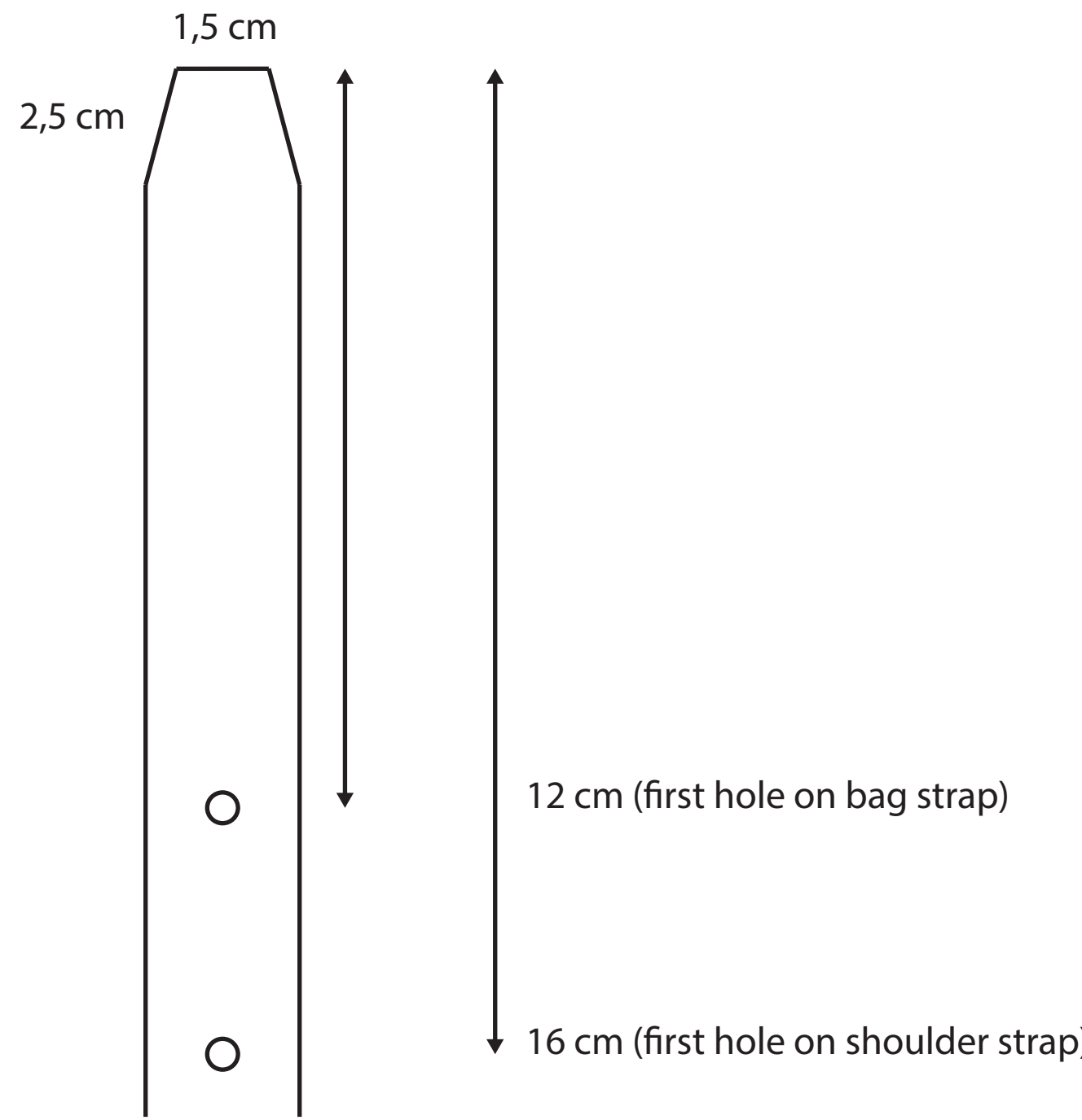

Strap holder

leather thickness: 3-3,2

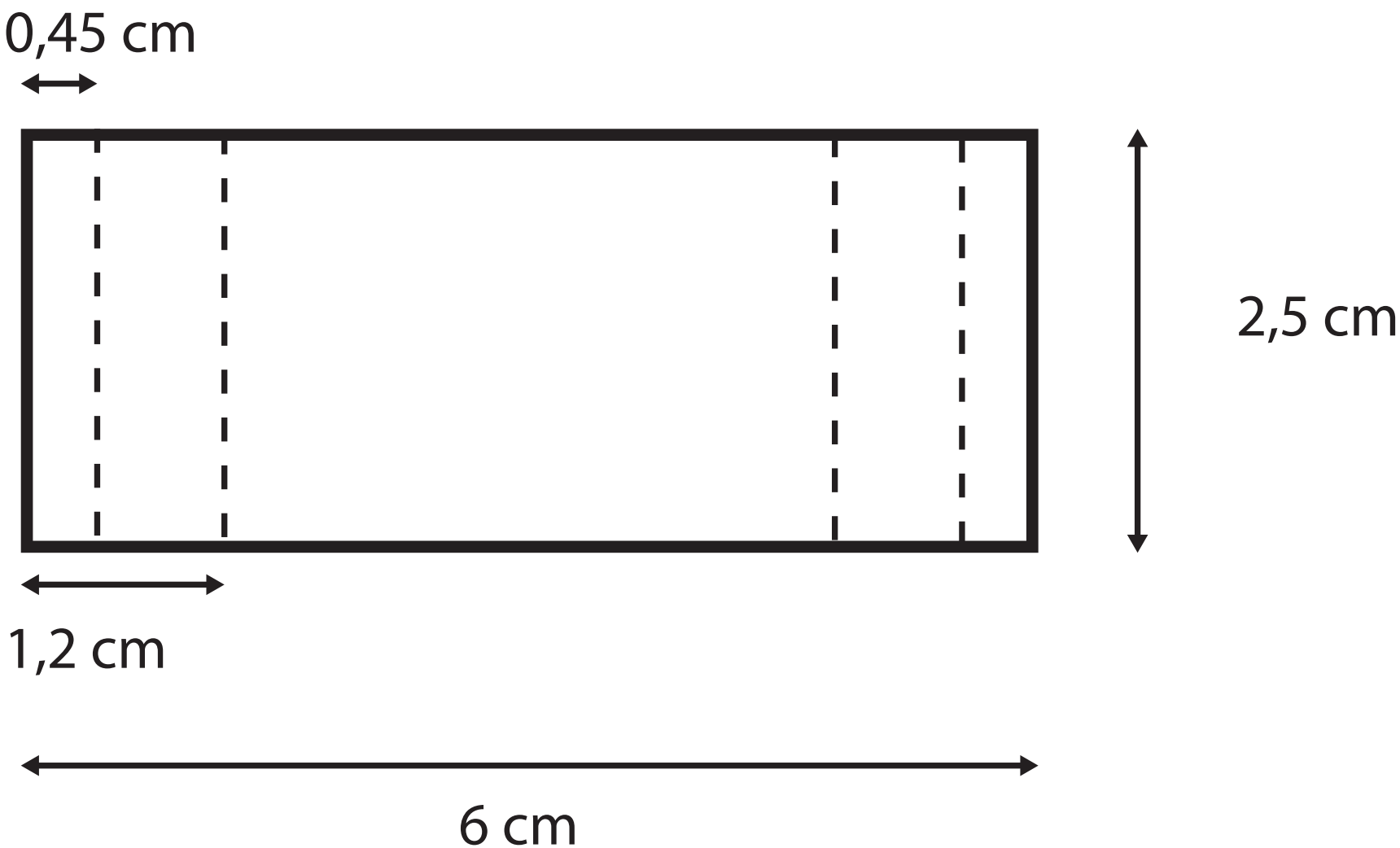

Shoulder pad

leather thickness: 3-3,2

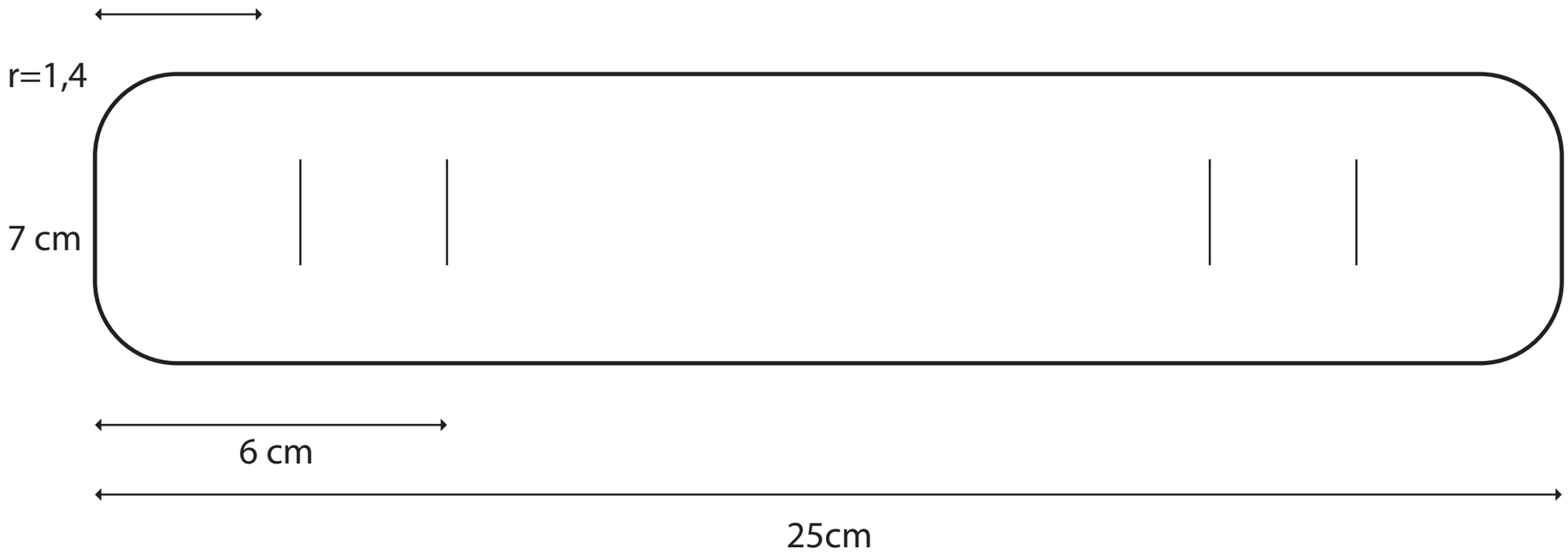

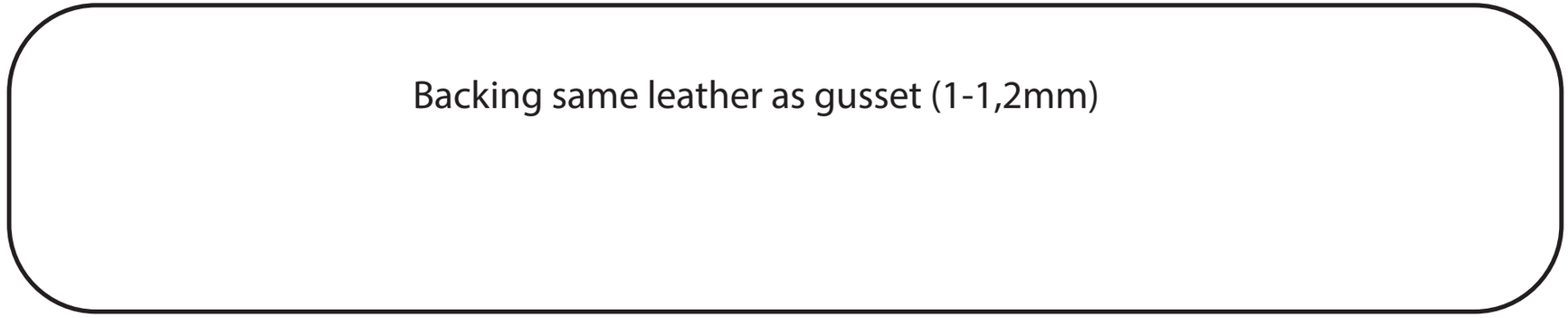

Pocket + pencil holder

leather thickness: 1-1,2

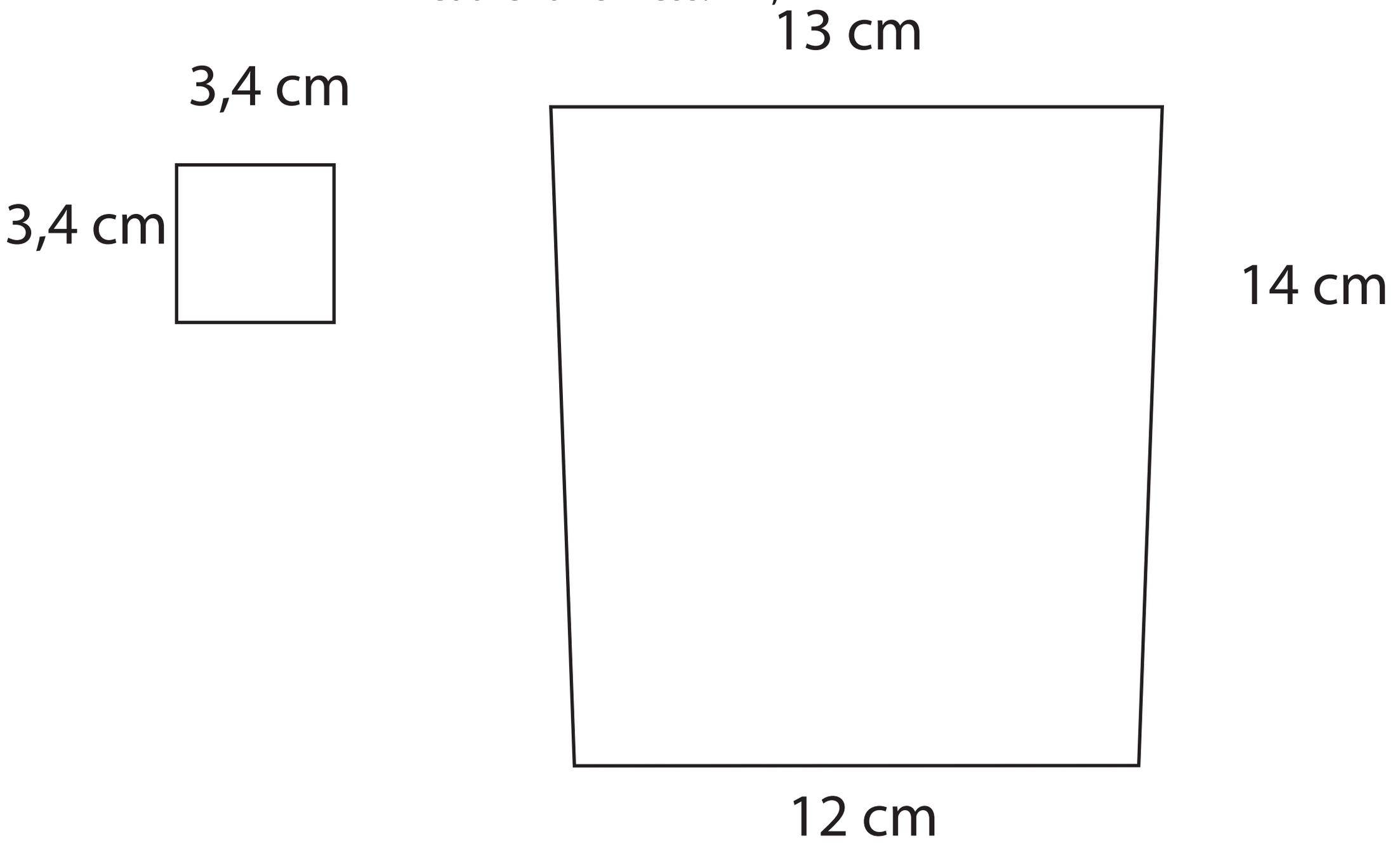

Partition board

leather thickness: 3-3,2

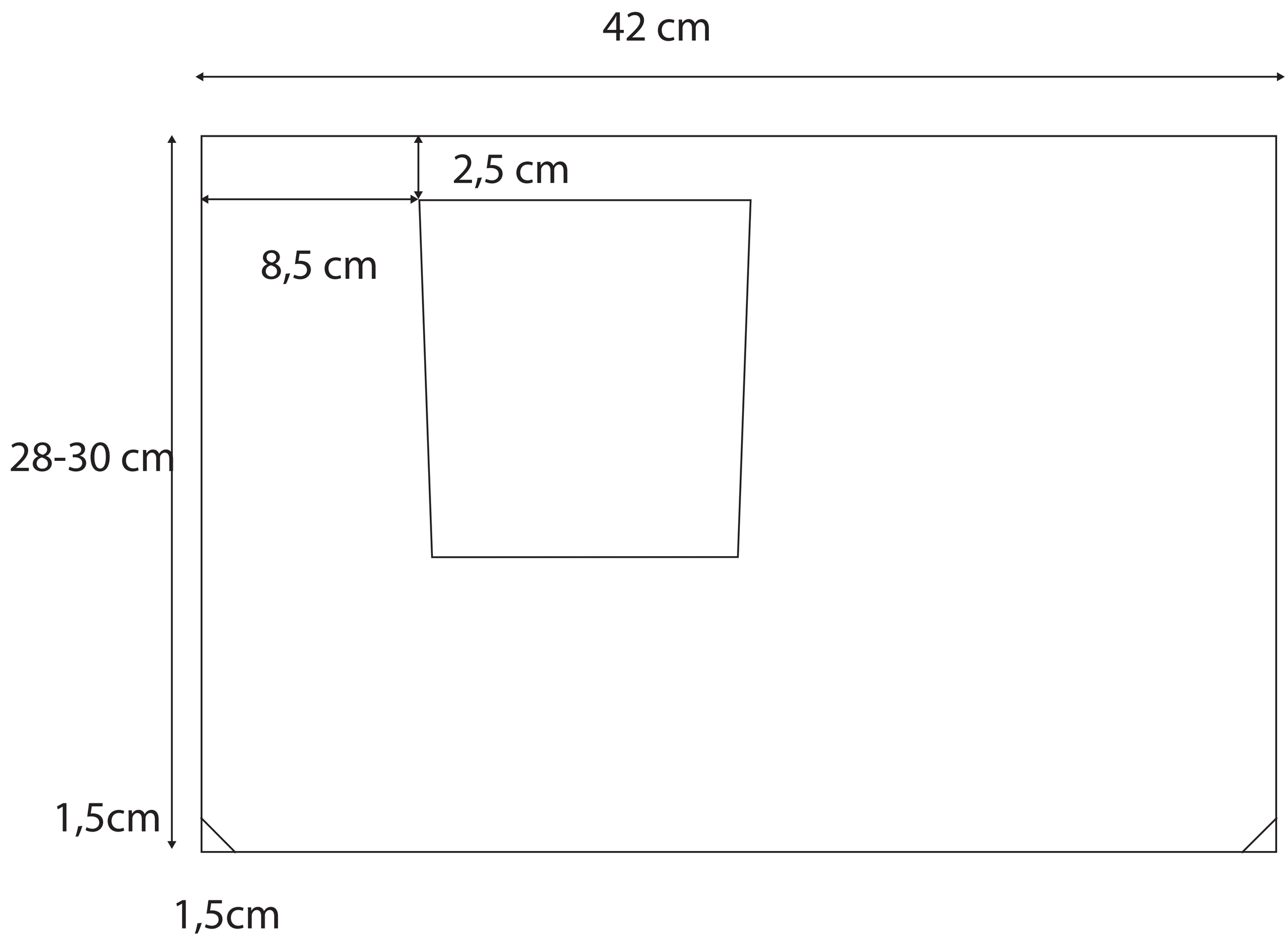

Back piece

leather thickness: 3-3,2

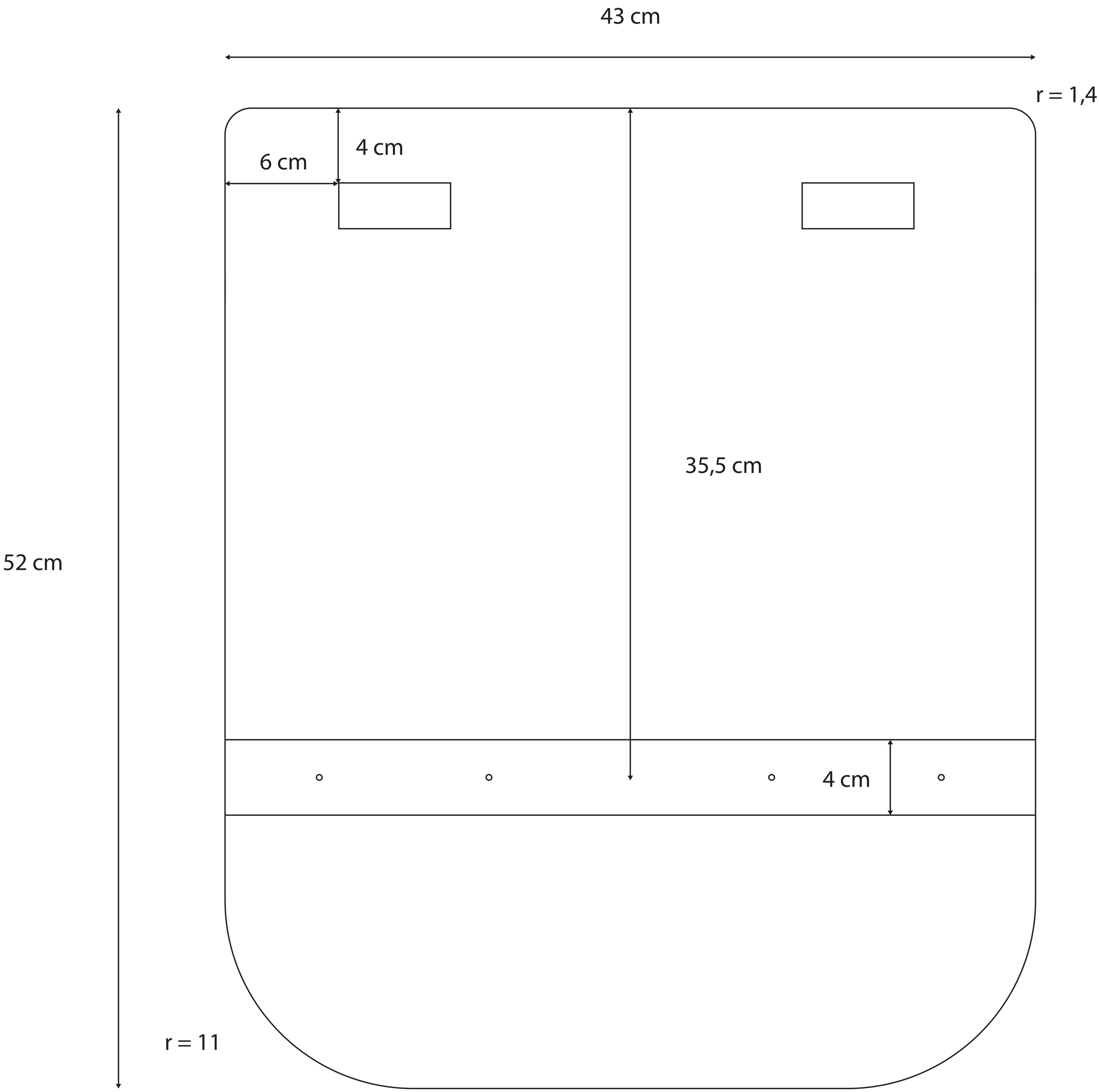

Filler

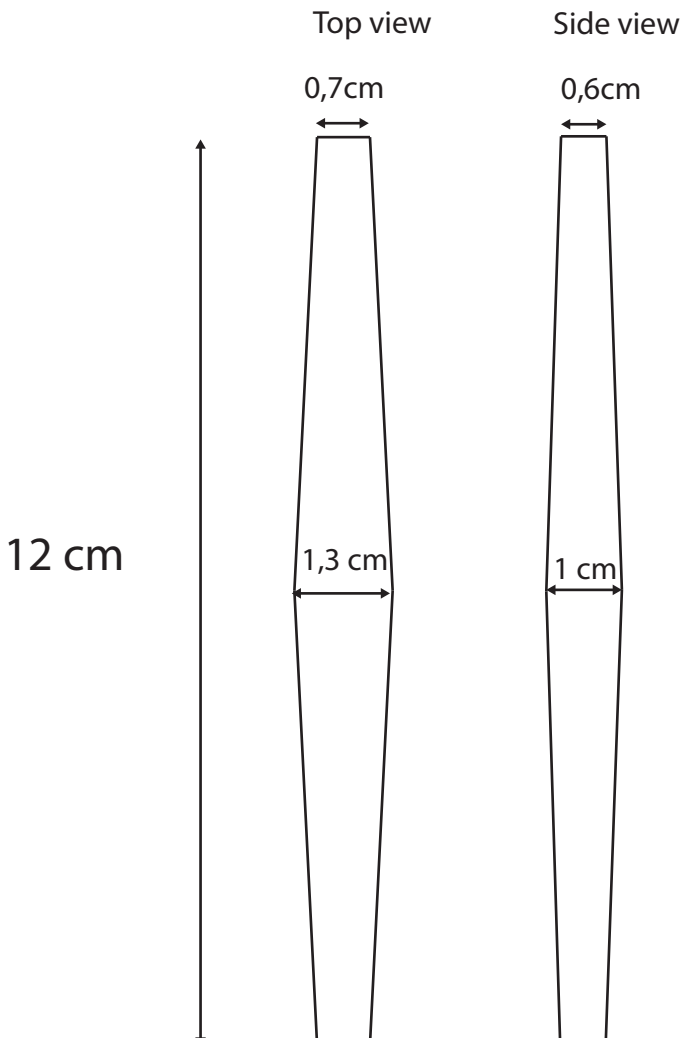

Handle cover

leather thickness: 3-3,2

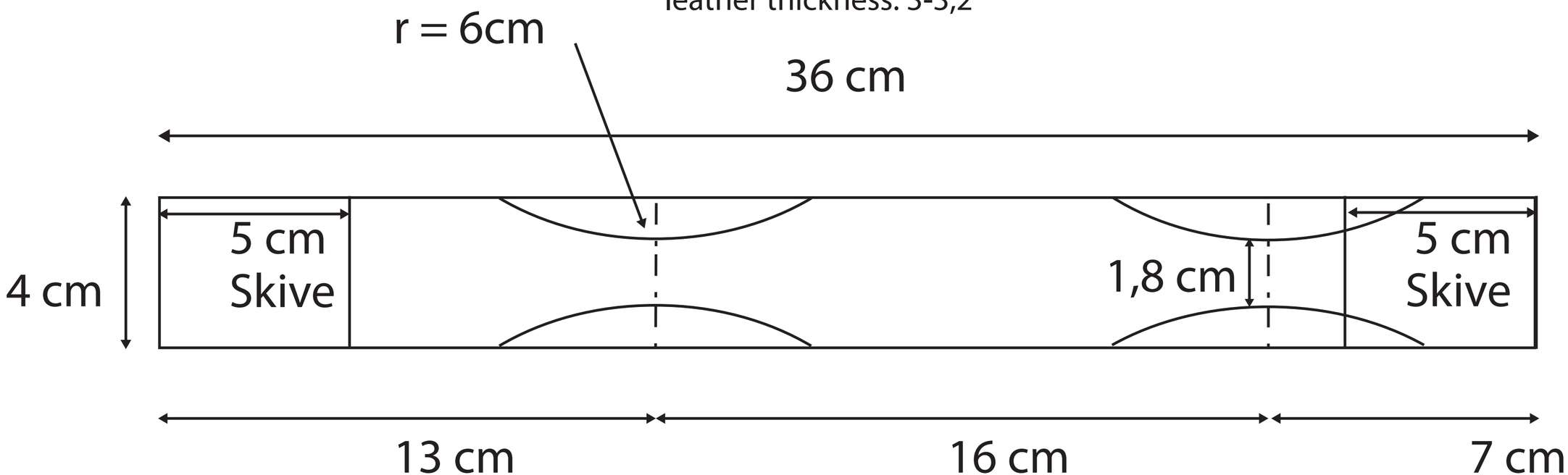

Front piece

leather thickness: 3-3,2

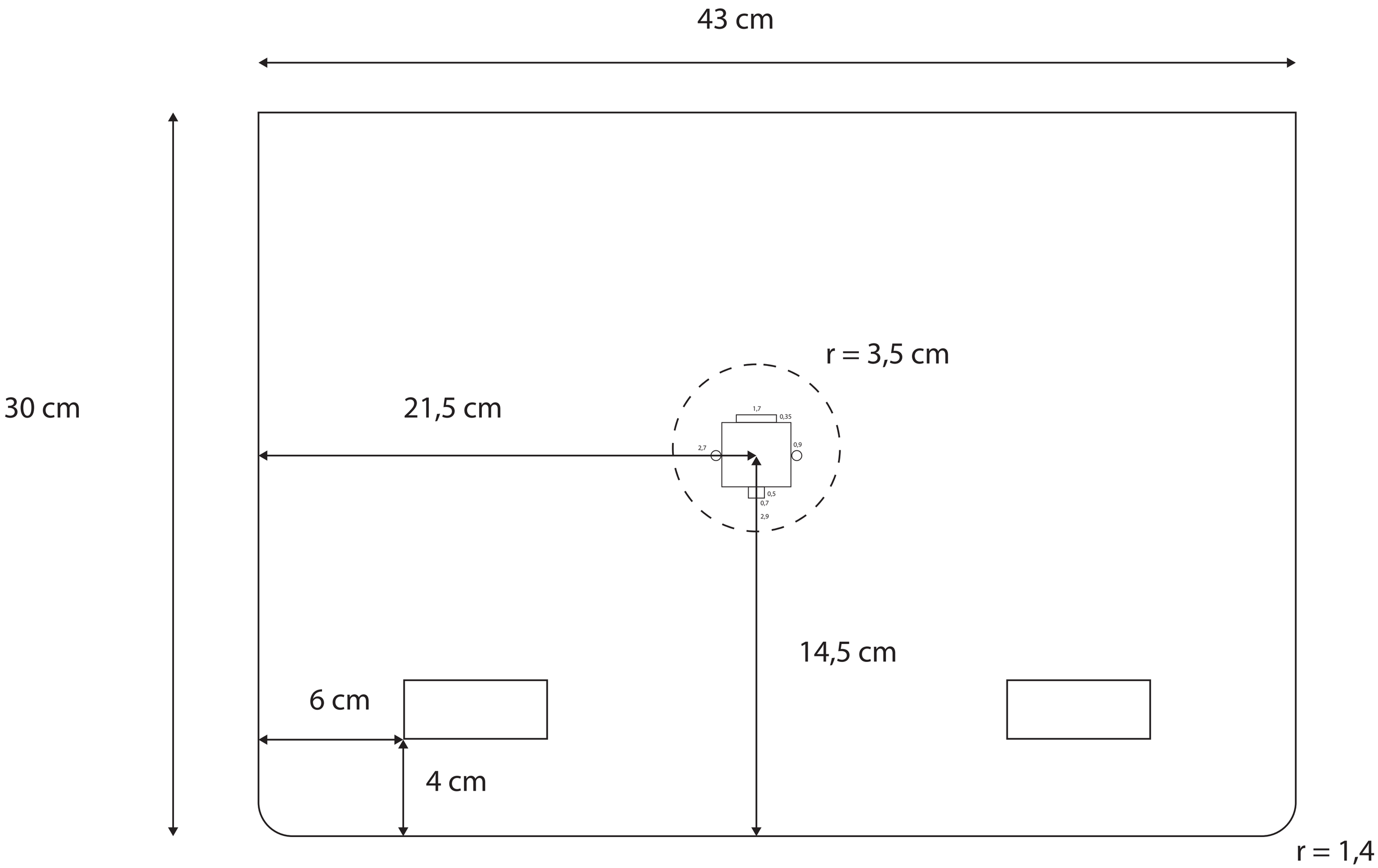

Briefcase pattern - overview

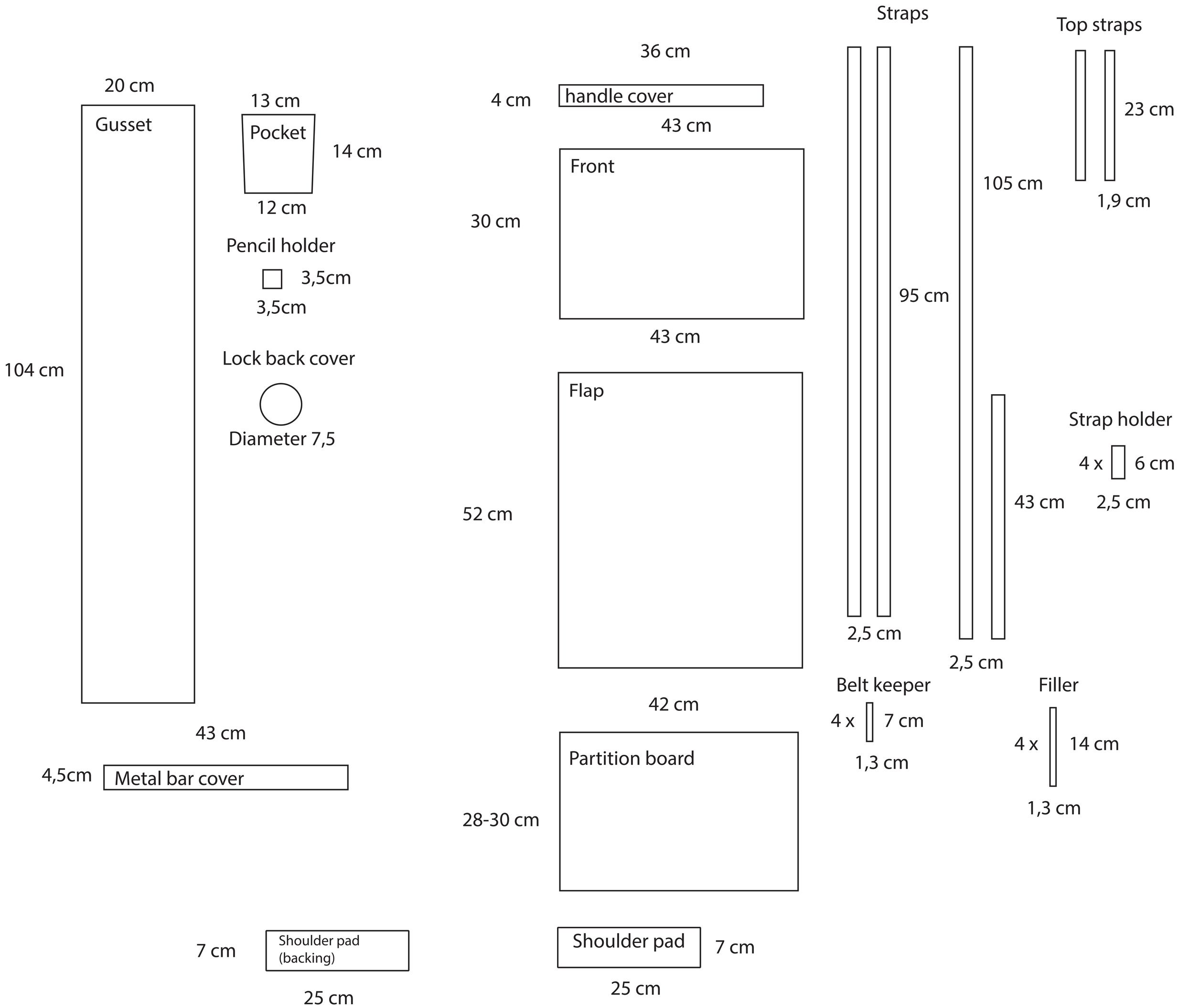

leather thickness 1-1,2 mm

Leather thickness 3-3,2mm

Briefcase pattern - Cutting layout

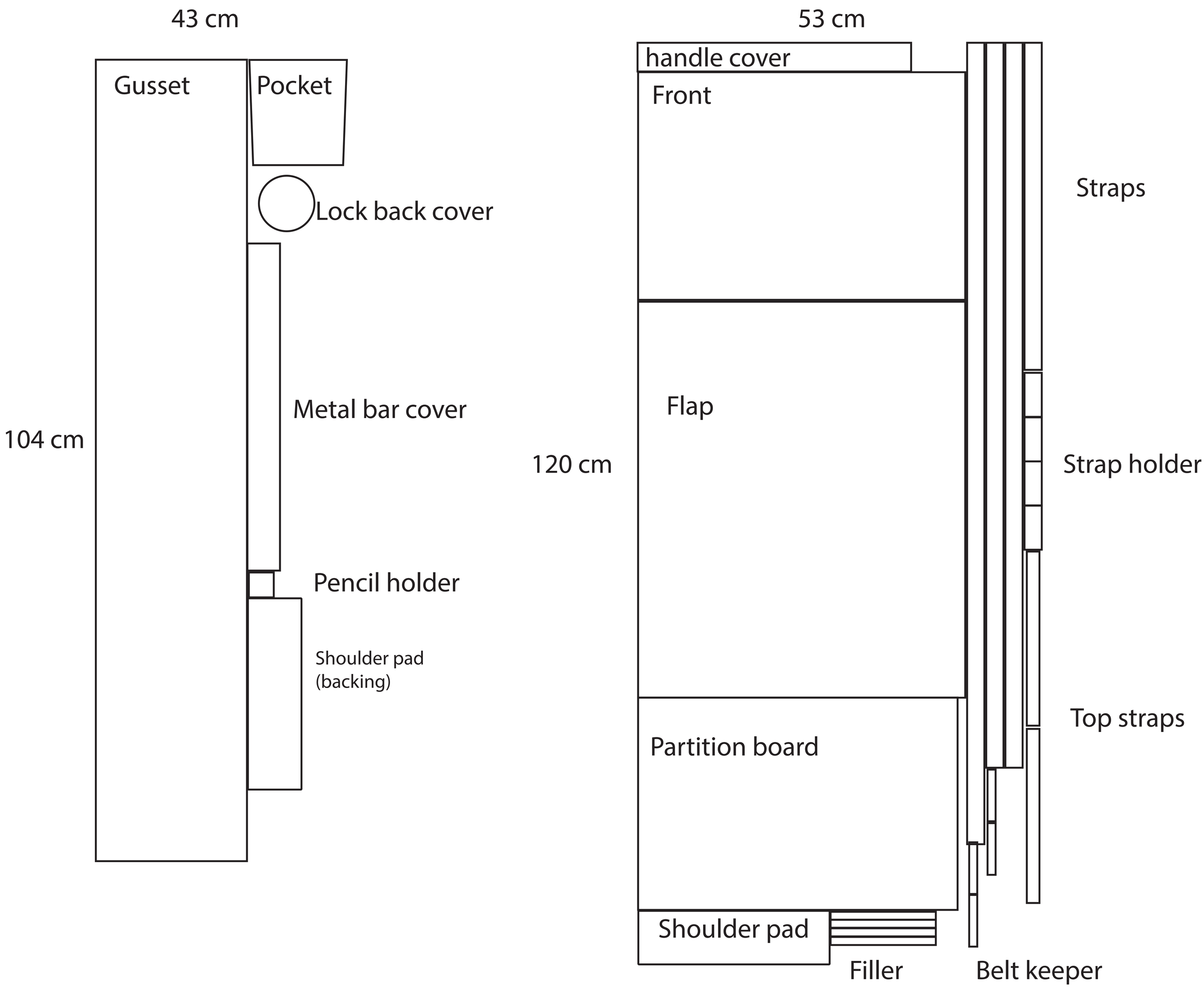

Gusset
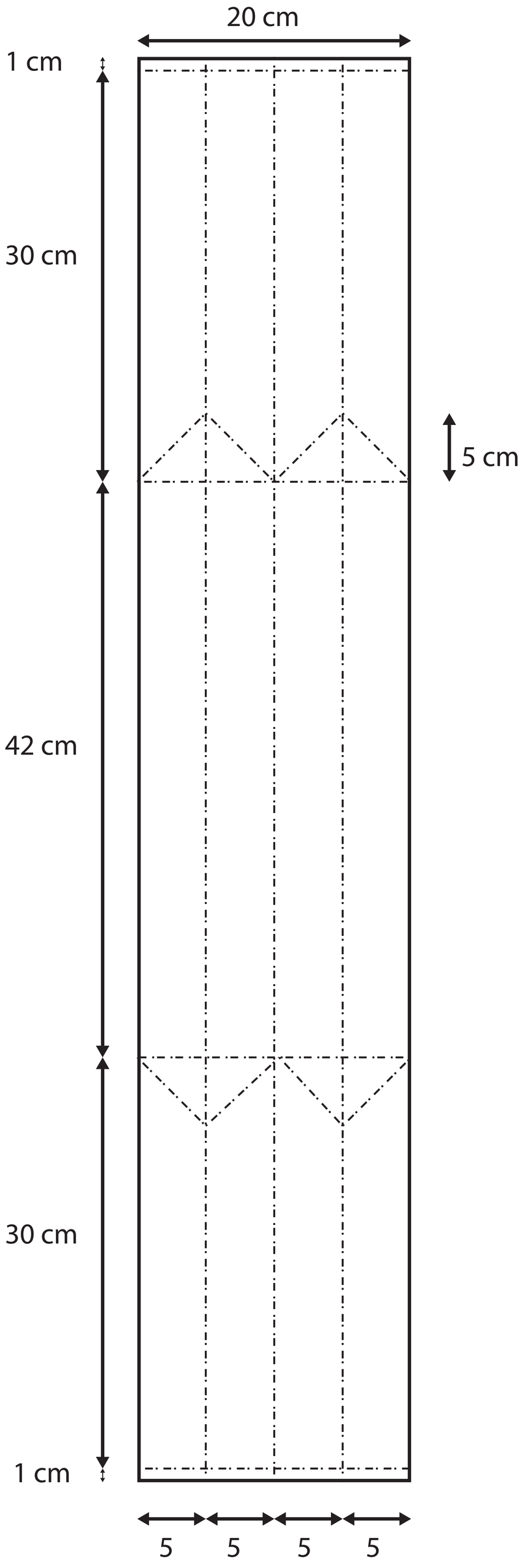
leather thickness: 1-1,2mm