CREATIVE AWL

leather patterns

EDC POUCH BELT CASE

PREPARED BY:
Patryk Ku,
www.CreativeAwl.com

PLEASE READ!

If it wasn't for your support, this pattern wouldn't have come into being, thanks! If you already post pictures of your bag in the social media, I would be invariably glad if you would mention the author. I also encourage you to share your work on our facebook group.

All rights reserved. No content may be shared or reproduced. If you would like to share it, please recommend our facebook group or https://www.creativeawl.com

Thank you and have fun!

Patryk

LET'S GO:

01

PRINT THE PATTERN

-Open your pattern in Adobe Acrobat Reader. Set up options of your printer on A4 paper with 0 margins (if needed).
-Every page has a measure - check does it fit.
- Every printed page MUST HAVE a border around! If does'nt - move paper left/ right and print again and check the settings

02

VIDEO TUTORIAL:
https://youtu.be/EfqK794OmFI

Cutting patterns:
https://youtu.be/2TNUl_Tlk64

03

GIVE A SMILE TO OTHER PEOPLE!

Give a ready product to you family or freind. Give them a smile :)))

Also Check www.CreativeAwl.com for more patterns

04

JOIN OUR FB GROUP

Go there to share your work. Also get more DIY&ideas. We will support you & answer all questions.

https://www.facebook.com/groups/CreativeAwlPatterns

YOU NEED

MATERIALS

- leather (4 -6 oz)
- 0,8mm waxed thread
- 2rivets
- o/d-ring / keyring / carabineer

TOOLS

- sharp knife
- 1-1,5 and 3, 4, 8, 10mm hole punchers
- hammer
- 2 needles
- paper tape
- a home printer

SHARE YOUR WORK

https://www.facebook.com/groups/CreativeAwlPatterns

If you got ANY problem,- don't be shy to ask directly on Etsy or facebook

EDC pouch belt case: pages 5 - 11
The first version of the belt attachment: page 8
The second version of the belt attachment: page 9
The third version of the belt attachment: page 10
The fourth version of the belt attachment: page 11

-The number in the circle shows which holes are to be connected. Example: ①
-Numbers 1, 2, 3 (...) without a circle indicate where the piece lies in the overview drawing.

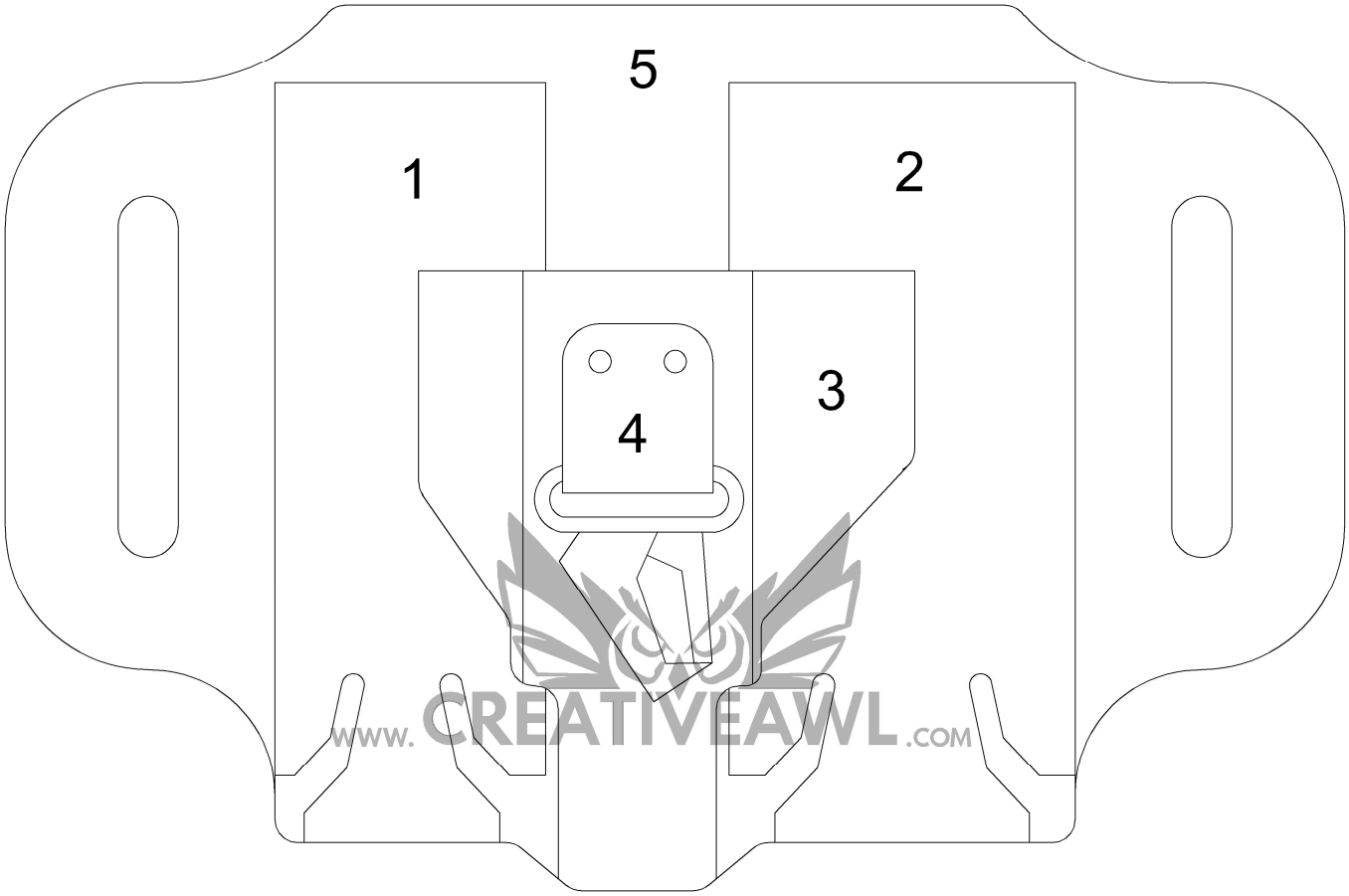

www.CREATIVEAWL.com

11 in LETTER 8,5 in A4

0 0,5 1 1,5 2 [in]
0 10 20 30 40 50 [mm]

Sketch draving

Roll backpack: about 0,075 m2

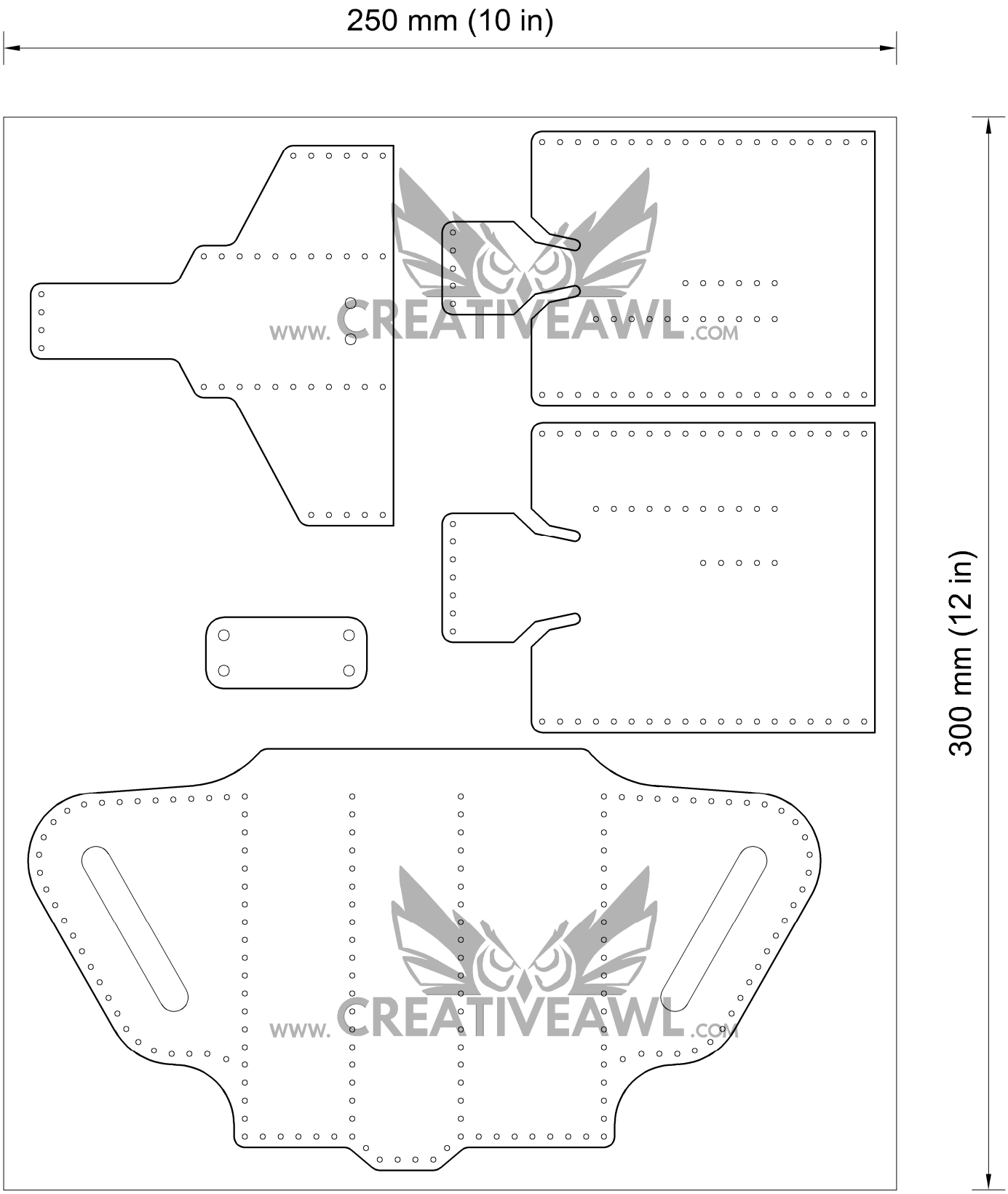

Sketch draving

Bill of materials

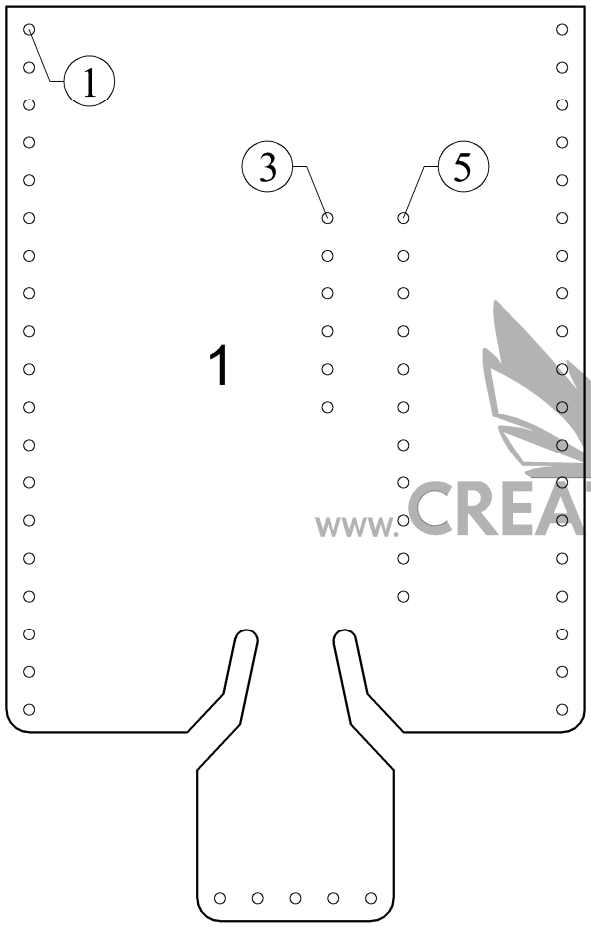

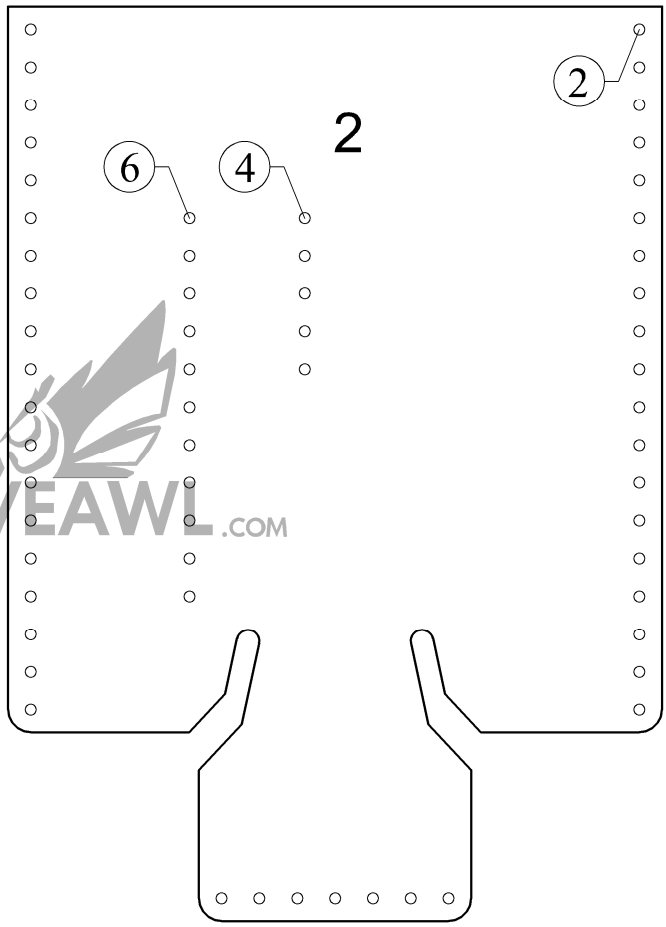

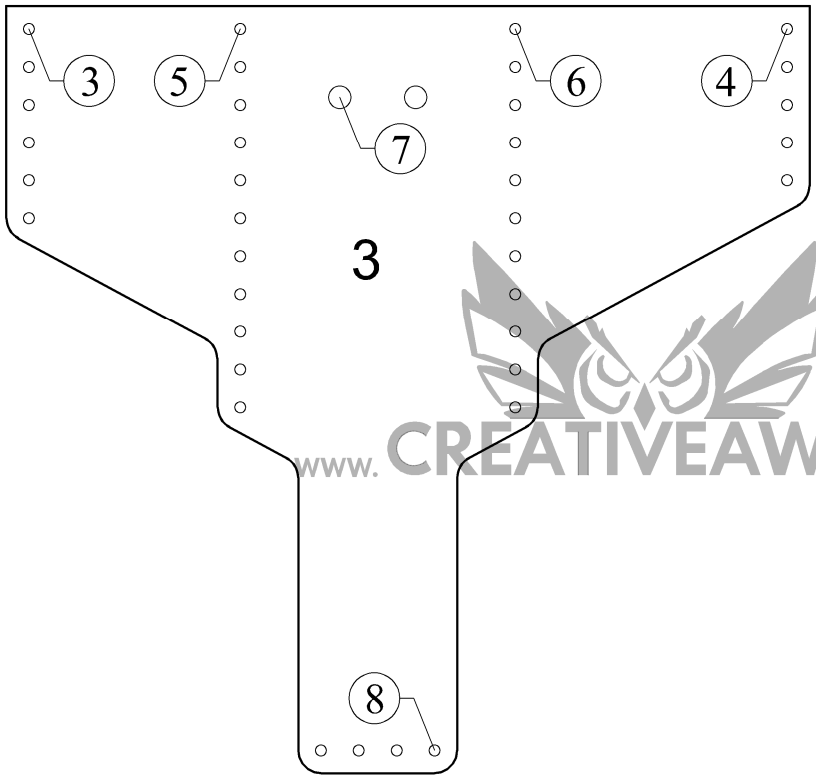

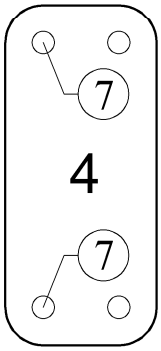

www.CREATIVEAWL.COM

11 in LETTER 8,5 in

A4

0 0,5 1 1,5 2 [in]

0 10 20 30 40 50 [mm]

EDC pouch belt case

The first version of the belt attachment

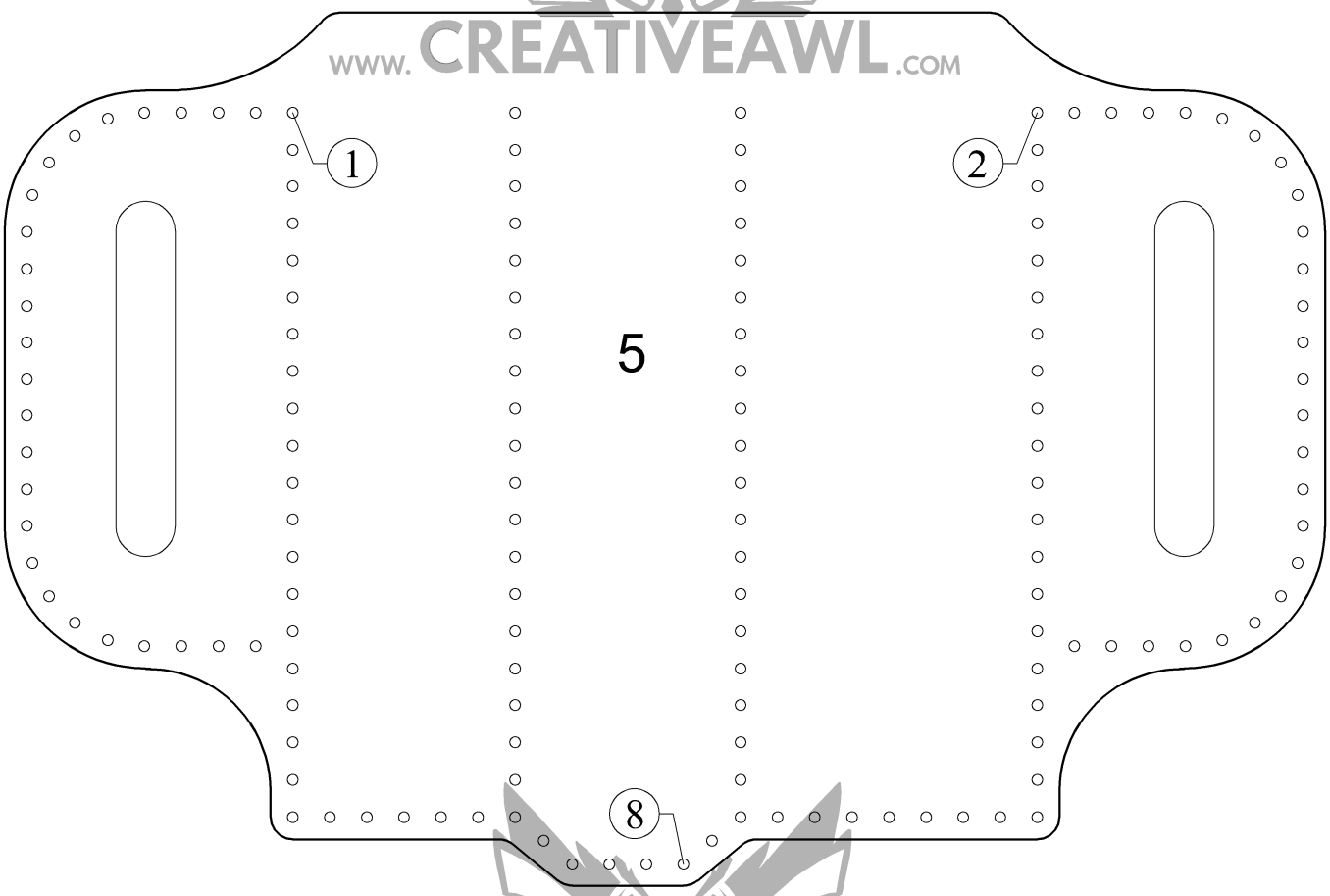

www.CREATIVEAWL.COM

11 in LETTER
8,5 in
A4

0 0,5 1 1,5 2 [in]
0 10 20 30 40 50 [mm]

EDC pouch belt case

The second version of the belt attachment

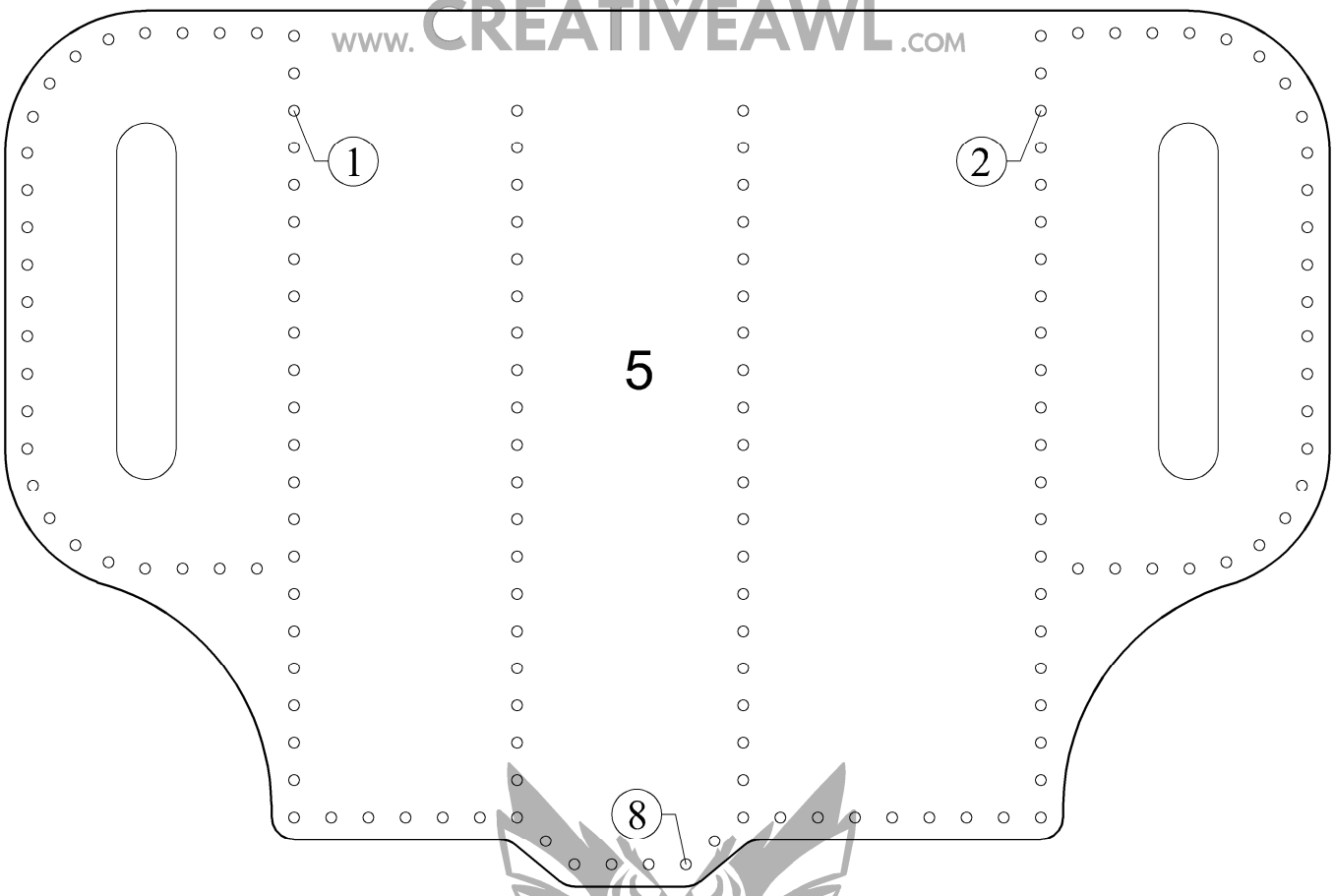

www.CREATIVEAWL.COM

11 in LETTER
8,5 in
A4
0 0,5 1 1,5 2 [in]
0 10 20 30 40 50 [mm]

EDC pouch belt case

The third version of the belt attachment

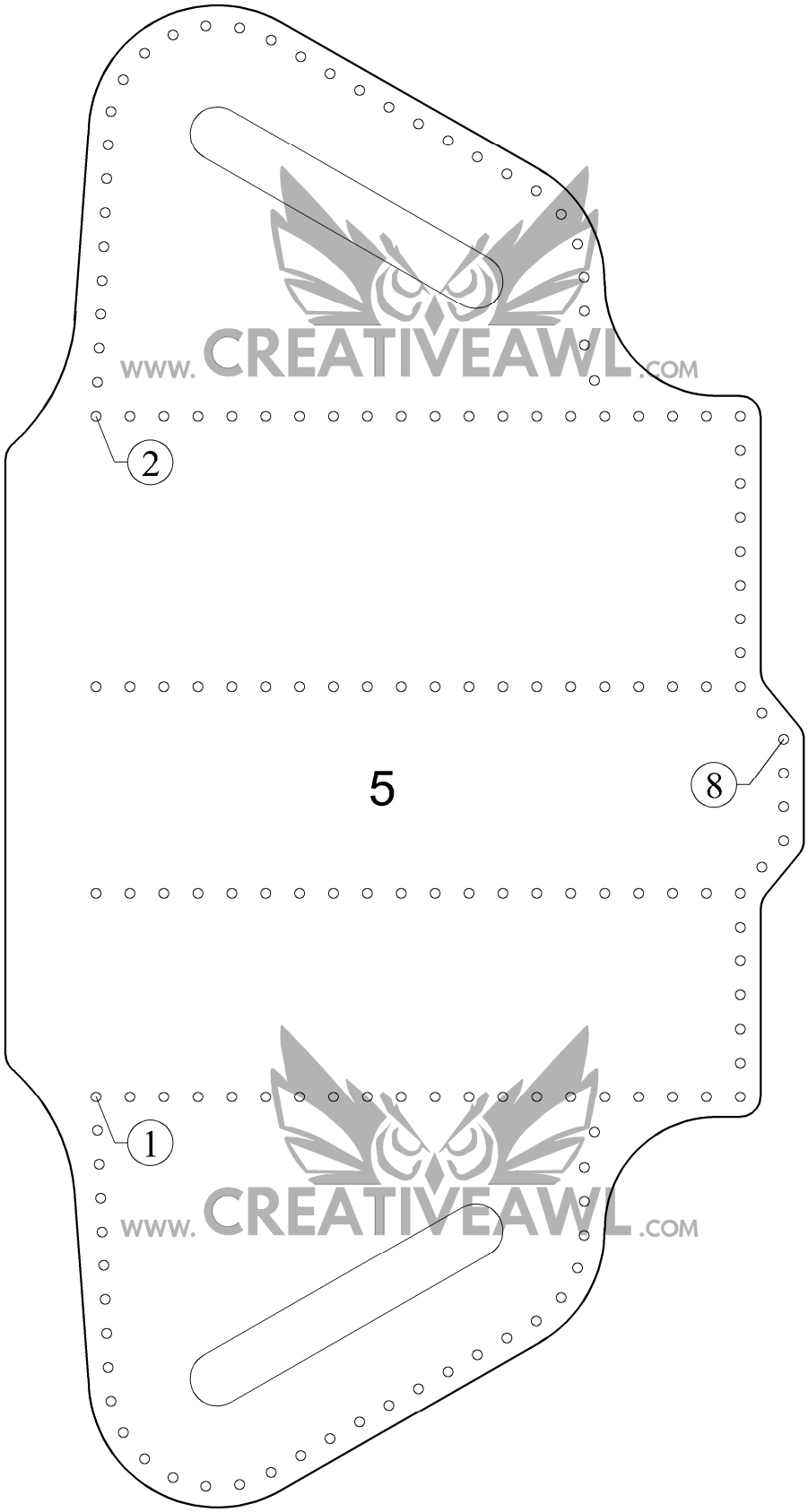

www.CREATIVEAWL.com

11 in LETTER
8,5 in
A4

0 0,5 1 1,5 2 [in]
0 10 20 30 40 50 [mm]

EDC pouch belt case

The fourth version of the belt attachment

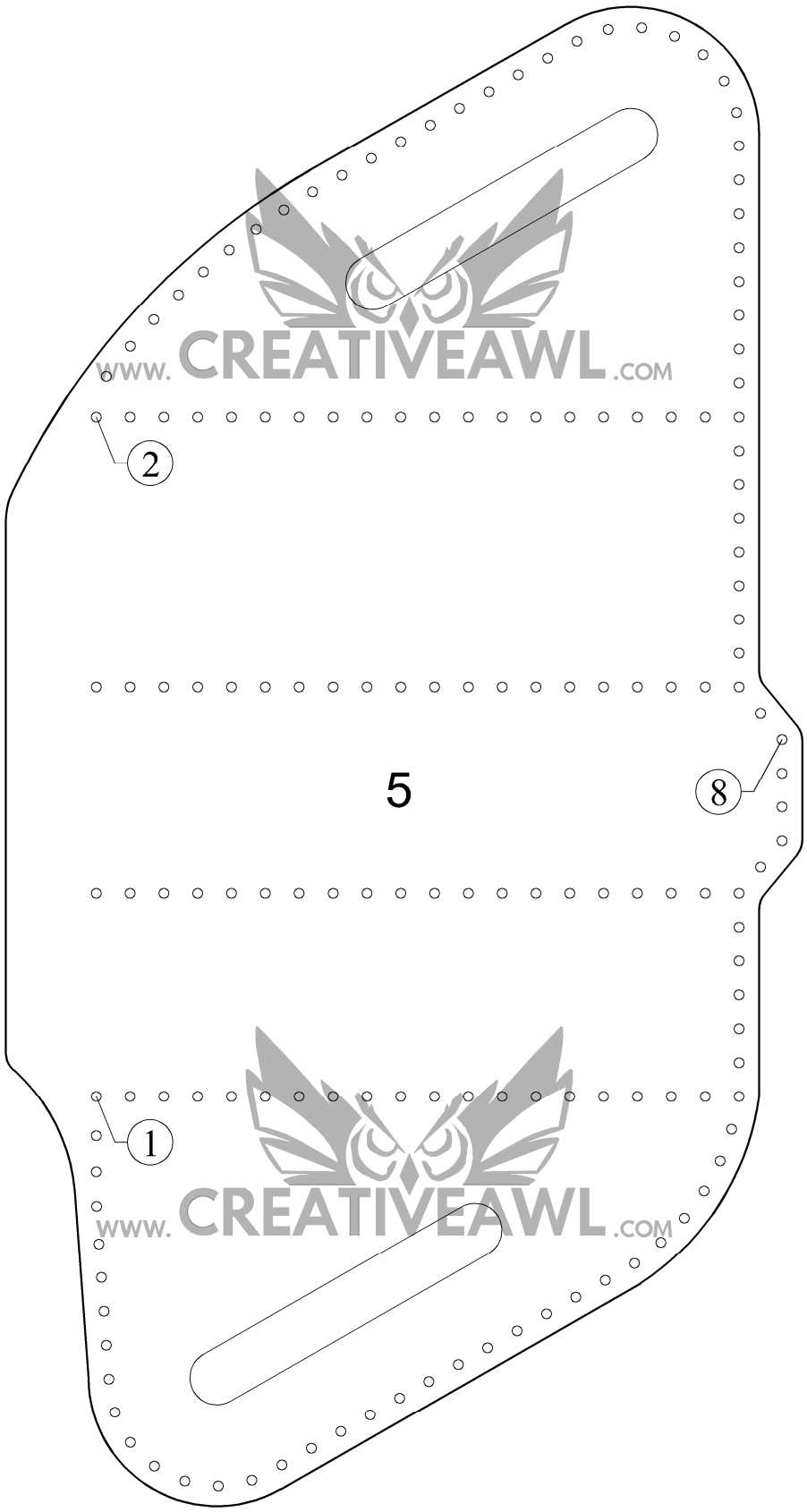

www.CREATIVEAWL.com

11 in LETTER
8,5 in

A4

0 0,5 1 1,5 2 [in]

0 10 20 30 40 50 [mm]

EDC pouch belt case